Centrifugal pumps

KNOLL
.It works

Version 05-2018

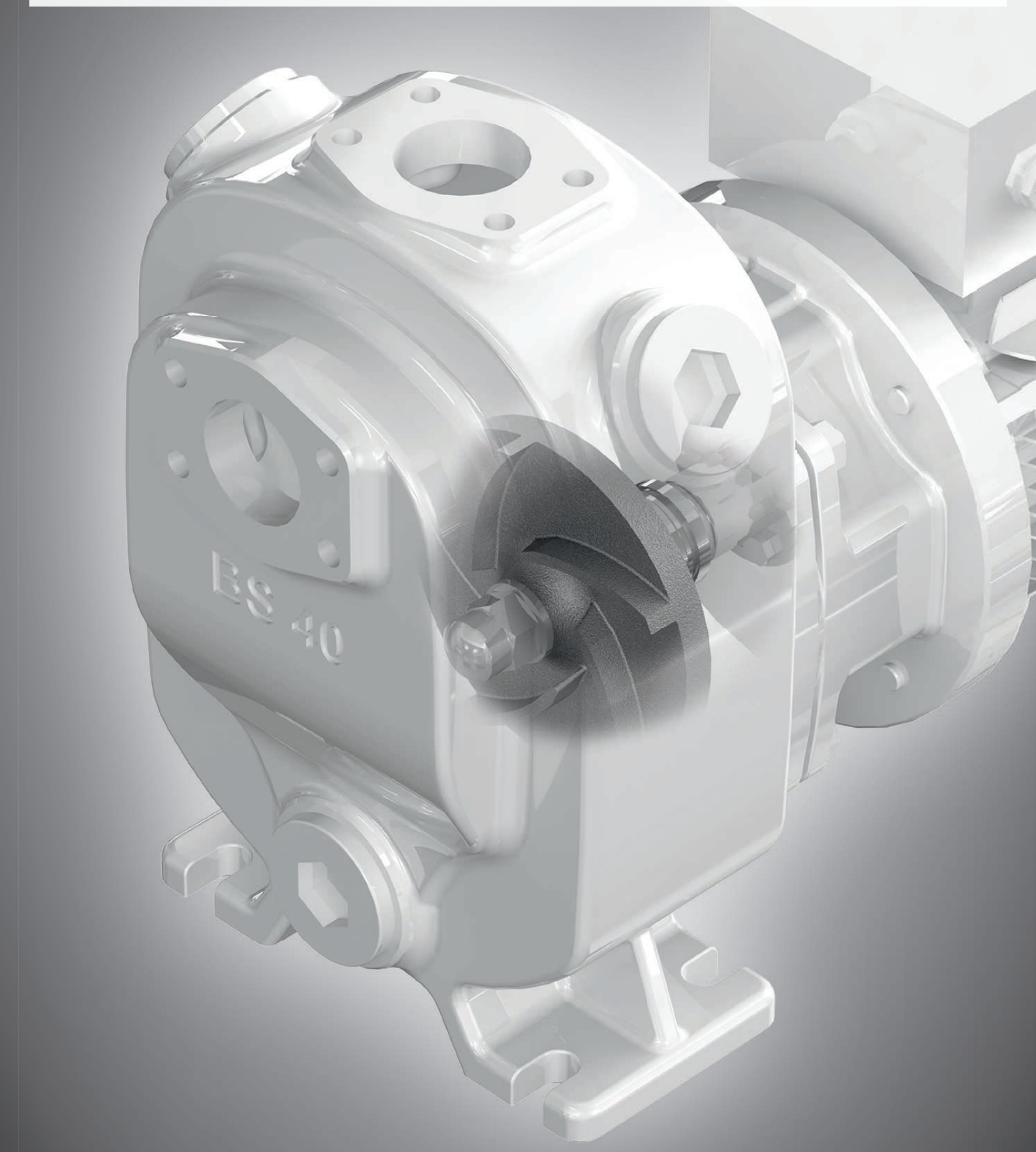

Content

KNOLL .It works 4

Layout and areas of application for the KNOLL centrifugal pump 6

Type key and standard multirange motors 7

Frequency inverter (FI) 8

Block pumps 10

- Self priming pump BS 40 12

Clean coolant pumps 14

- Clean coolant pump TG 25 16
- Clean coolant pump TG 30 18
- Clean coolant pump TG 40 20
- Clean coolant pump TG 50 22

Dirt coolant pumps 24

- Dirt coolant pump TF 40 26
- Dirt coolant pump TF 50 28
- Dirt coolant pump TS 40 30
- Dirt coolant pump TSK 40 32
- Dirt coolant pump TSK 50 34
- Dirt coolant pump TSK 65 36

Shredder pumps 38

- Shredder pump TSC 50 40
- Shredder pump TSC 65 42

KNOLL .It works

KNOLL is the largest employer in the Upper Swabian city Bad Saulgau with approximately 1,000 employees. Walter Knoll laid the foundation for the company in 1970. The family business supplies manufacturers and users of machine tools with conveyor and filter systems worldwide. All sectors that use machine tools for turning, milling, drilling or grinding apply KNOLL products, especially machine construction, electrotechnology, vehicle assembly, the aerospace industry and the energy sector. Since 1974, the company has grown continuously on its own premises. Its affiliation with and sense of responsibility toward the local region are part of its corporate philosophy. Whether planes, turbine buckets, car rims, knives or cell phones, the list of end products that KNOLL contributes to is highly varied.

KNOLL centrifugal pumps are available as submersible- or block pumps. These flow machines are used primarily on machine tools to convey cooling lubricants.

As return pumps, they transport the chips/cooling lubricant mixture to filters/separators. They then supply the machines again with the cleaned cooling lubricant. Thanks to their solid and robust design, the KNOLL coolant pumps have a high load capacity and a long durability..

There are 6 different configurations:
TG with closed impeller for cleaned cooling lubricant with residual dirt
TF with free-flow impeller for contaminated cooling lubricant
TS with helical impeller for contaminated cooling lubricant with air
TSK semi-open radial impeller for contaminated cooling lubricant with short chips
TSC semi-open radial impeller for contaminated cooling lubricant with long aluminum chips
BS with semi-open radial impeller for contaminated KSS with high air content

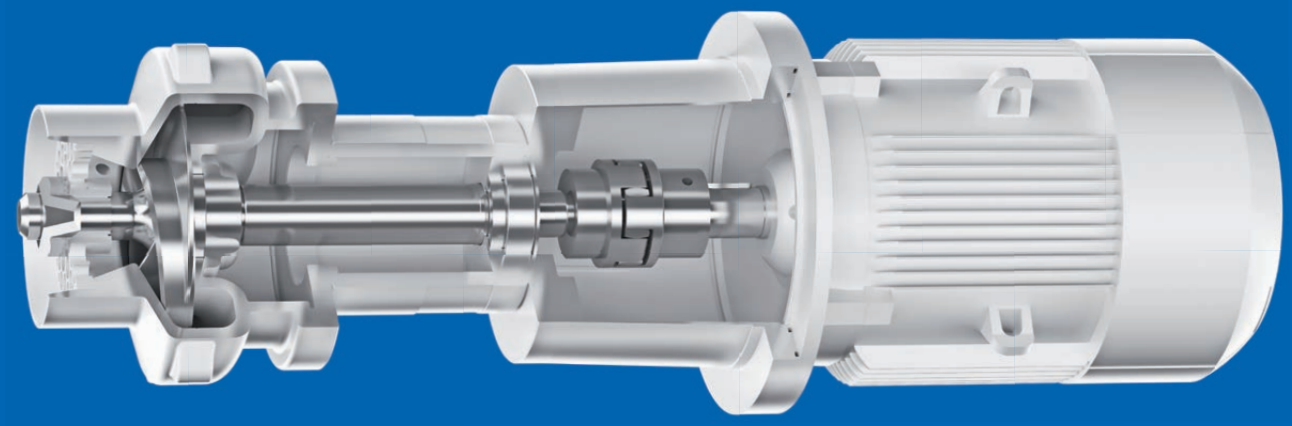

Type code

TSC 65–63/75 360

Pump type
Size
Impeller index
Motor power x 10
Immersion depth in mm

Application example TSC 65-63/75 360

TSC	Pump type	
65	Size	
63	Impeller index	Ø 163 mm
75	Motor power	7.5 kW
360	Immersion depth	360 mm

Drives

Standard multirange motors 2-pole, thermal class ISO-F, protection class IP54, IE3

0.37 kW to 5.5 kW
230 V (Δ) / 400 V (Y), 50 Hz, 2,900 min^{-1}
265 V (Δ) / 460 V (Y), 60 Hz, 3,500 min^{-1}

7.5 kW
400 V (Δ) / 690 (Y), 50 Hz, 2,900 min^{-1}
460 V (Δ), 60 Hz, 3,500 min^{-1}

Other voltages and efficiency classes on request.

Technical data for the IEC/EN 60034 standard

In order to minimize stress to the pump and motor, the switch-on frequency should not exceed once per minute. If this is not possible, the pump should run through.

Rated power	Switching frequency
0.1 kW to 2.6 kW	60 x / hour
3.0 kW to 5.5 kW	40 x / hour
7.5 kW to 10.0 kW	20 x / hour
› 10.0 kW	15 x / hour

Note: The following characteristic curves refer to 50 Hz rotational speed and cooling lubricant (emulsion) with 1 mm^2/s. Characteristic curves for other media, rotational speeds, and viscosities on request. The economically usable range is marked by dashed lines.

Frequency inverter (FI) 0.75 – 7.5 kW

Advantages

- Compact dimensions by installing the inverter onto the terminal box (piggyback).
- KNOLL control know-how included.

Recommended motor power [kW]	0.75	1.10	1.50	2.20	3.00	4.00	5.50	7.50
Line current [A]	1.90	2.60	3.30	4.60	6.20	7.90	10.80	14.80
Nominal output current [A] at 400 V/8 kHz	2.30	3.10	4.00	5.60	7.50	9.50	13.00	17.80
Size	A			B			C	
Weight including worktop [kg]	3.9			5.0			8.7	
Protection class	IP 65							
Max. overload for 60 sec [%]	150							
Mains voltage	3 AC 400 V - 15% to 480 V + 10%							
Mains frequency	50 / 60 Hz ± 6%							
EMC acceptance	Compliant according to DIN EN 61800 - 3, class C2							
Certificates and conformance	CE and UL							
Temperature range	- 25°C (without condensation) up to + 50°C (without derating)							
Safety functions	Over/under voltage, I²t limit, short -circuit, motor temperature, inverter temperature, anti-tipper protection, antilock							
Initial frequency range	0 - 400 Hz							
Digital inputs	4							
Fixed frequency	7							
Digital outputs	2							
Analog inputs	2 analog inputs (0 / 2 - 10 V, 0 / 4 - 20 mA)							
Analog outputs	0 - 10 V (-Imax = 10 mA) or 0 - 20 mA (load impedance R = 500 Ω)							
Process control	Freely configurable PID controller							
Relay outputs	2 NO contacts 250 V AC 2 A							
USB- interface	USB for M12 connector (converter RS485 / RS232)							
Manual control unit (optional)	MMI with line							
Bus module (optional)	Profibus DP, CANopen, EtherCAT							
Safe stop	Optional							

Dimensions

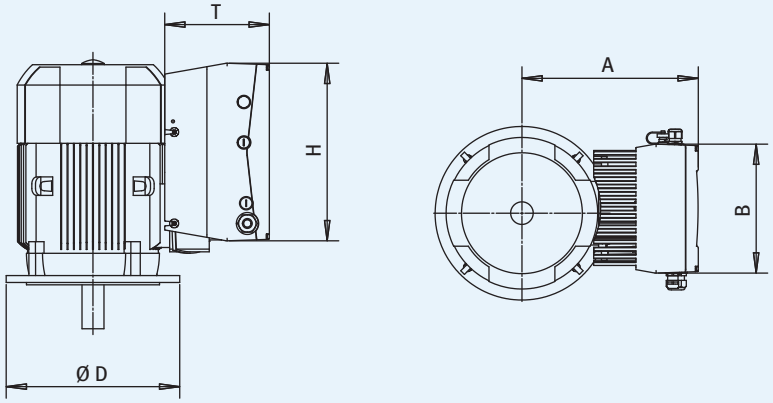

Motor power [kW]	Installation size	Main dimensions [mm]				
		A	B	D	H	T
0.75 - 1.5	A	205	153	200	233	120
2.2	B	230	189	200	270	140
3.0	B	235	189	250	270	140
4.0	B	245	189	250	270	140
5.5 - 7.5	C	310	223	300	307	181

Design example:
Shredder pump TSC with frequency inverter

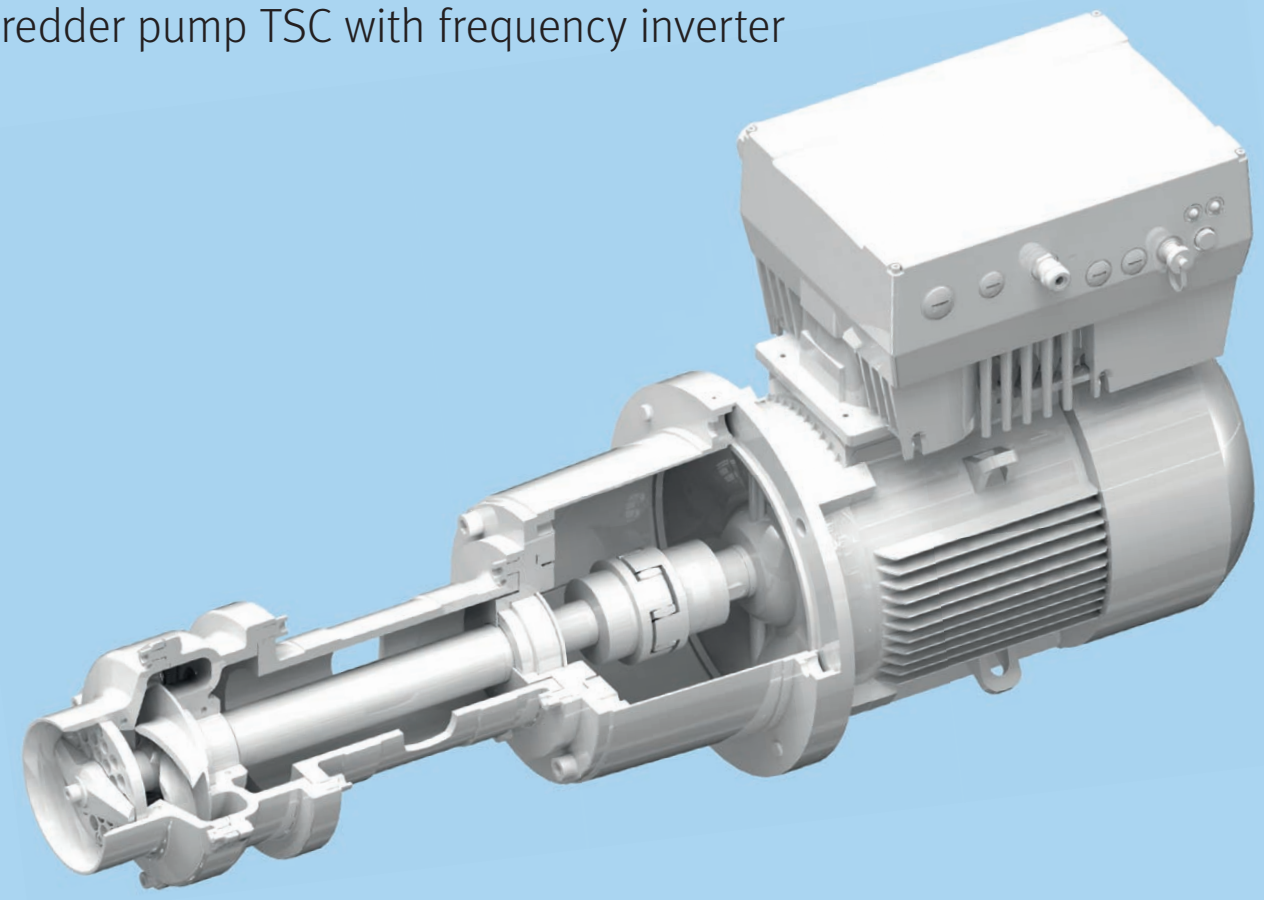

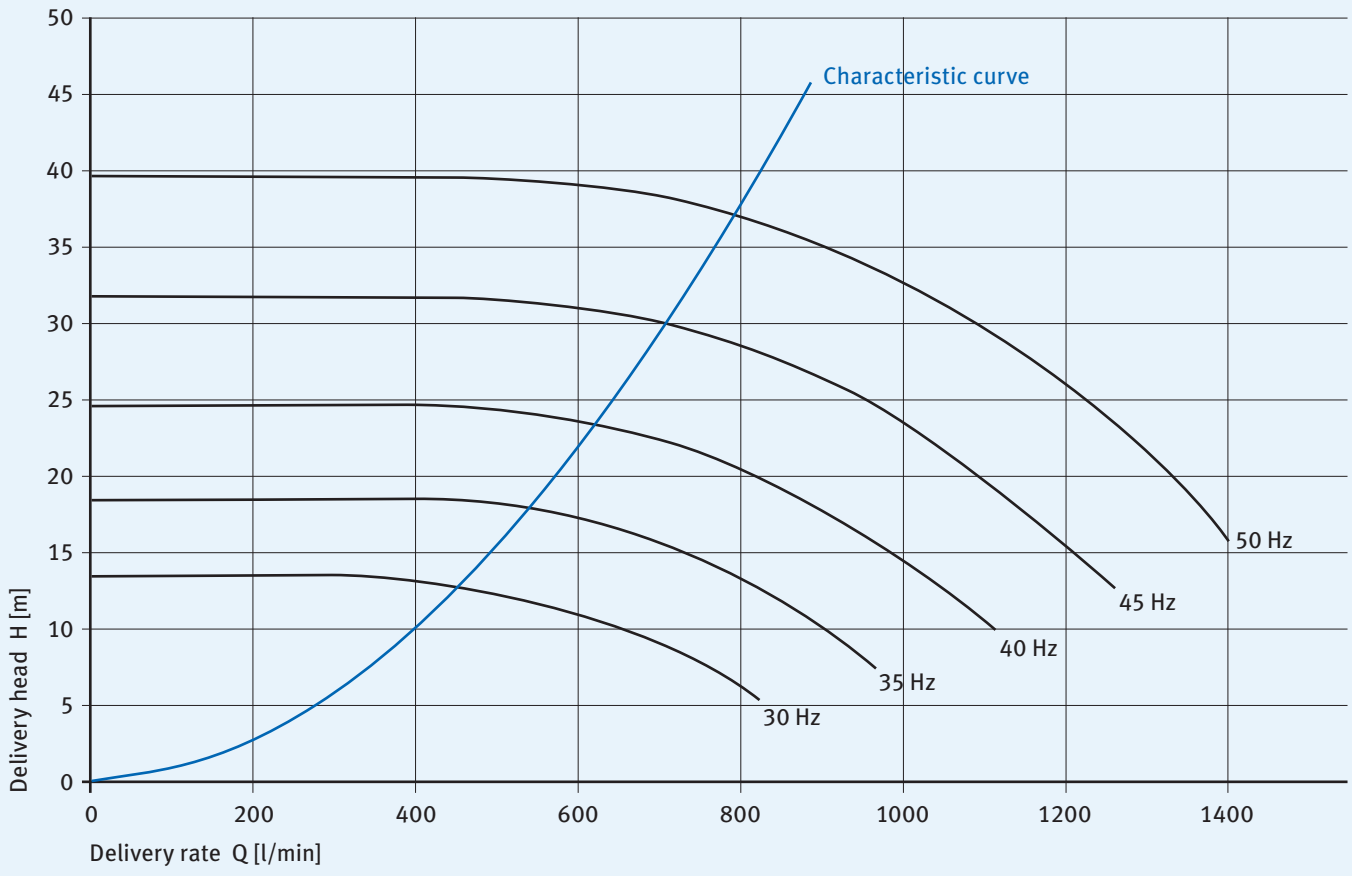

Block pumps

Self priming KNOLL block pumps of the BS series are pumps which transport contaminated cooling lubricant with high air content. Thanks to the solid and robust design, KNOLL block pumps are extremely reliable and have a long durability.

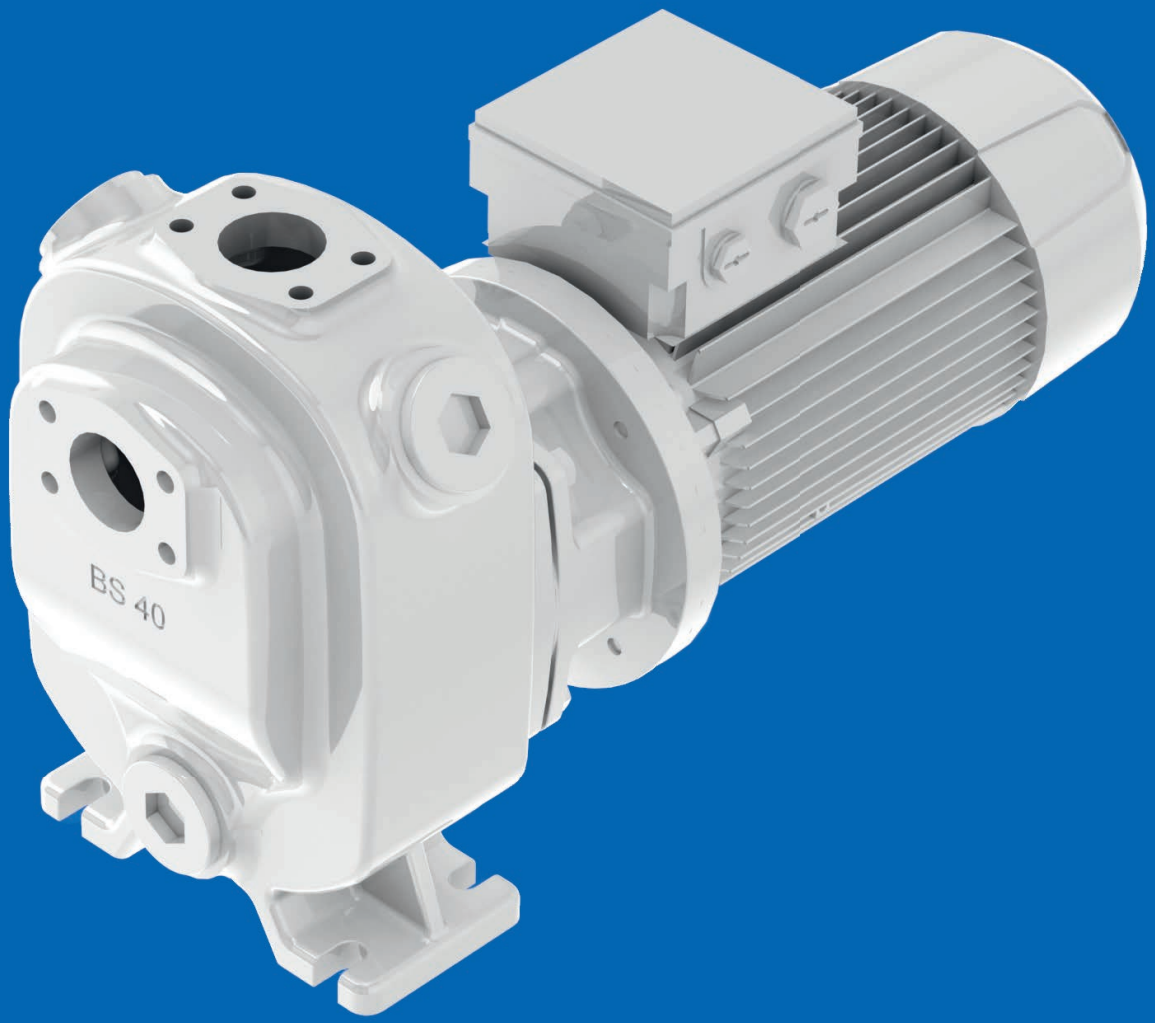

Properties

- Dry installation
- Self priming
- Flexible design with standard motor
- Energy efficient in conjunction with frequency converter
- Flow-optimized housing with impeller
- High-quality and wear-resistant mechanical seal
- Rapid suction time
- Variable connection possibilities for pressure side piping

Maximum performance data

Type	Delivery rate [l/min]	Delivery head [m]	Chip thickness [mm]
BS 40	340	24	10

Connections

Type	Pressure connection	Suction connection	Fill opening
BS 40	SAE 1-1/2"	SAE 1-1/2"	G 1-1/2"

Characteristic curve

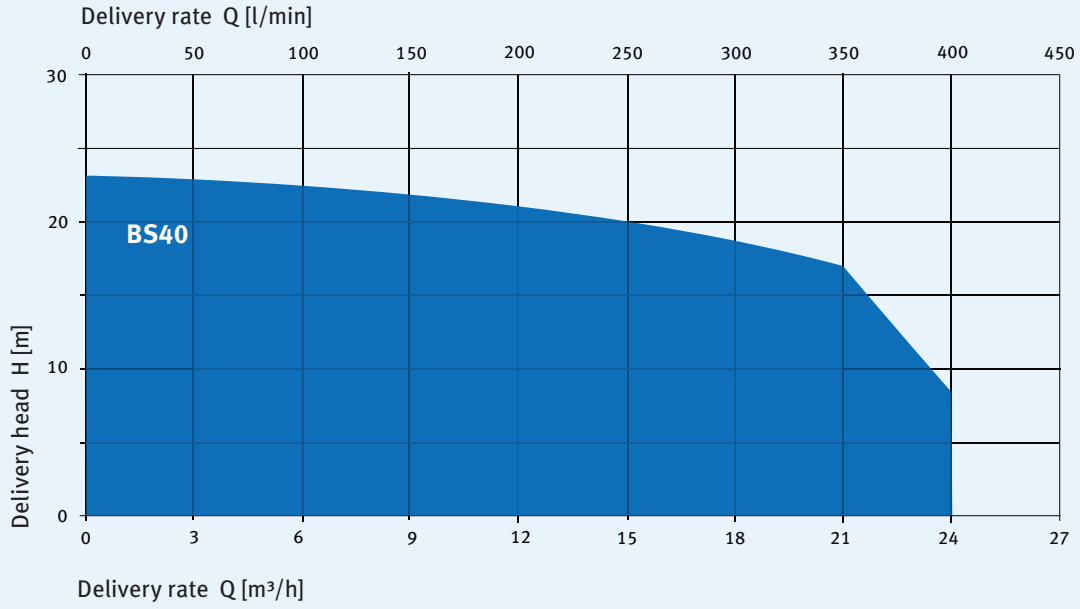

Self priming pump BS 40

New 09/2018

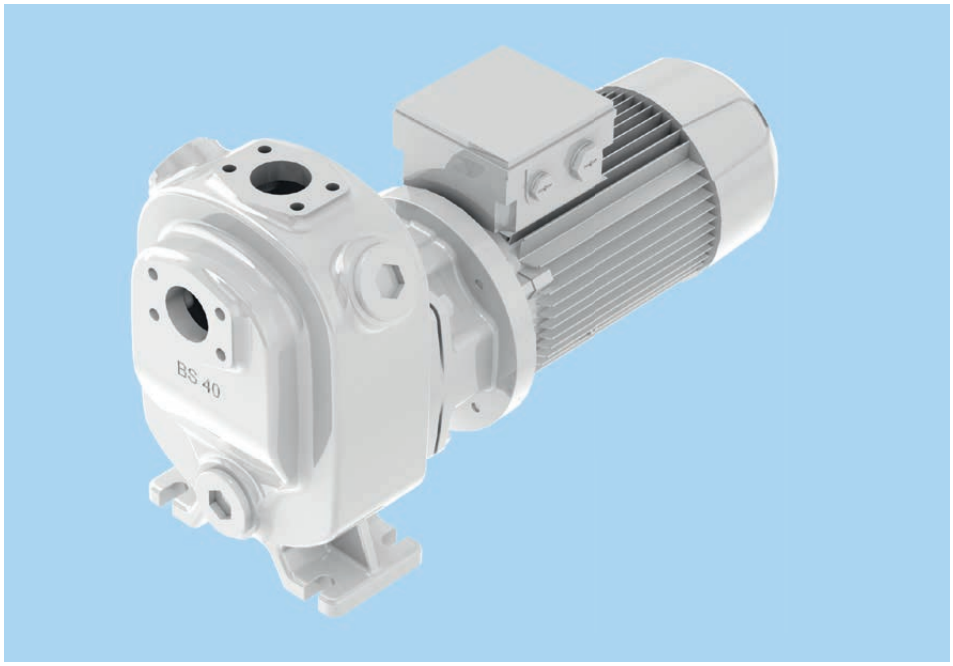

Variants

Type	Motor power [kW]	Frequency [Hz]	Weight [kg]
BS 40-30 / 22	2.2	50	50
BS 40-10 / 22	2.2	50 / 60	50
BS 40-95 / 22	2.2	50 / 60	50

Dimensions

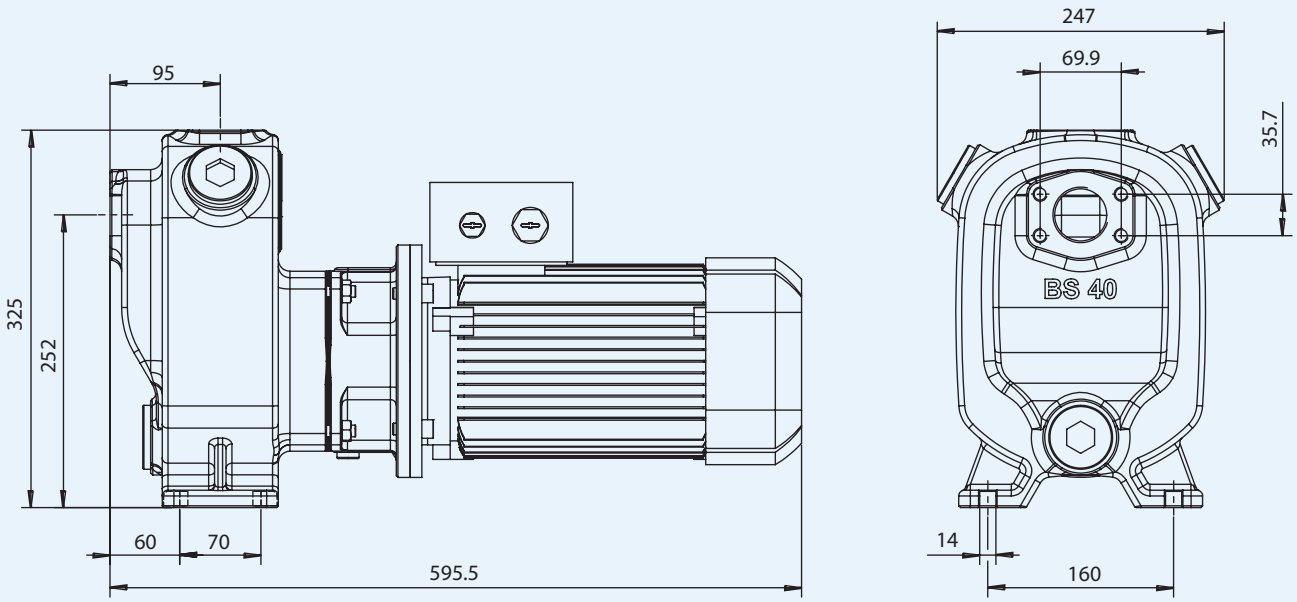

Characteristic curves for 2,900 min^{-1}, 50 Hz, 1 mm^2/s

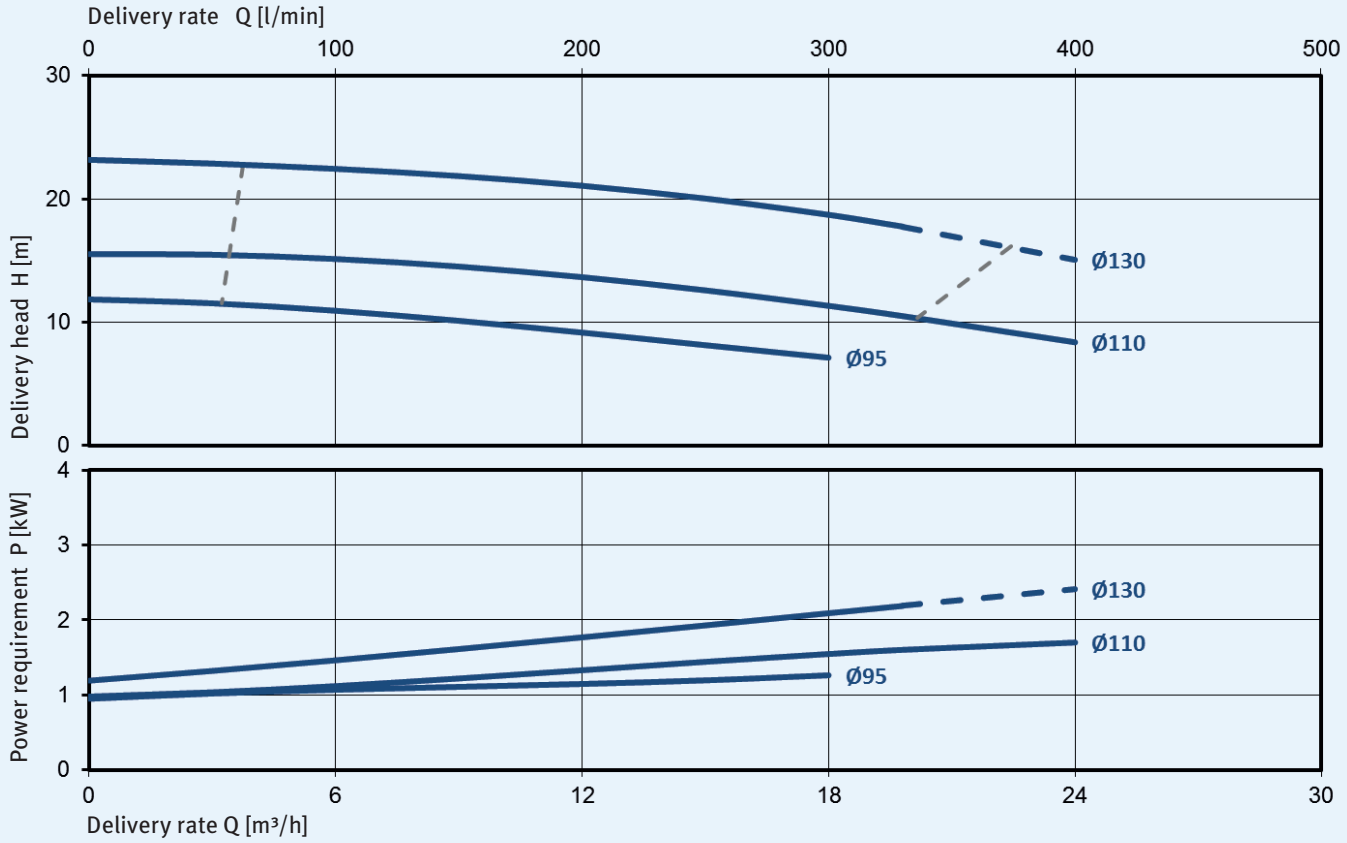

Characteristic curves for 3,500 min^{-1}, 60 Hz, 1 mm^2/s

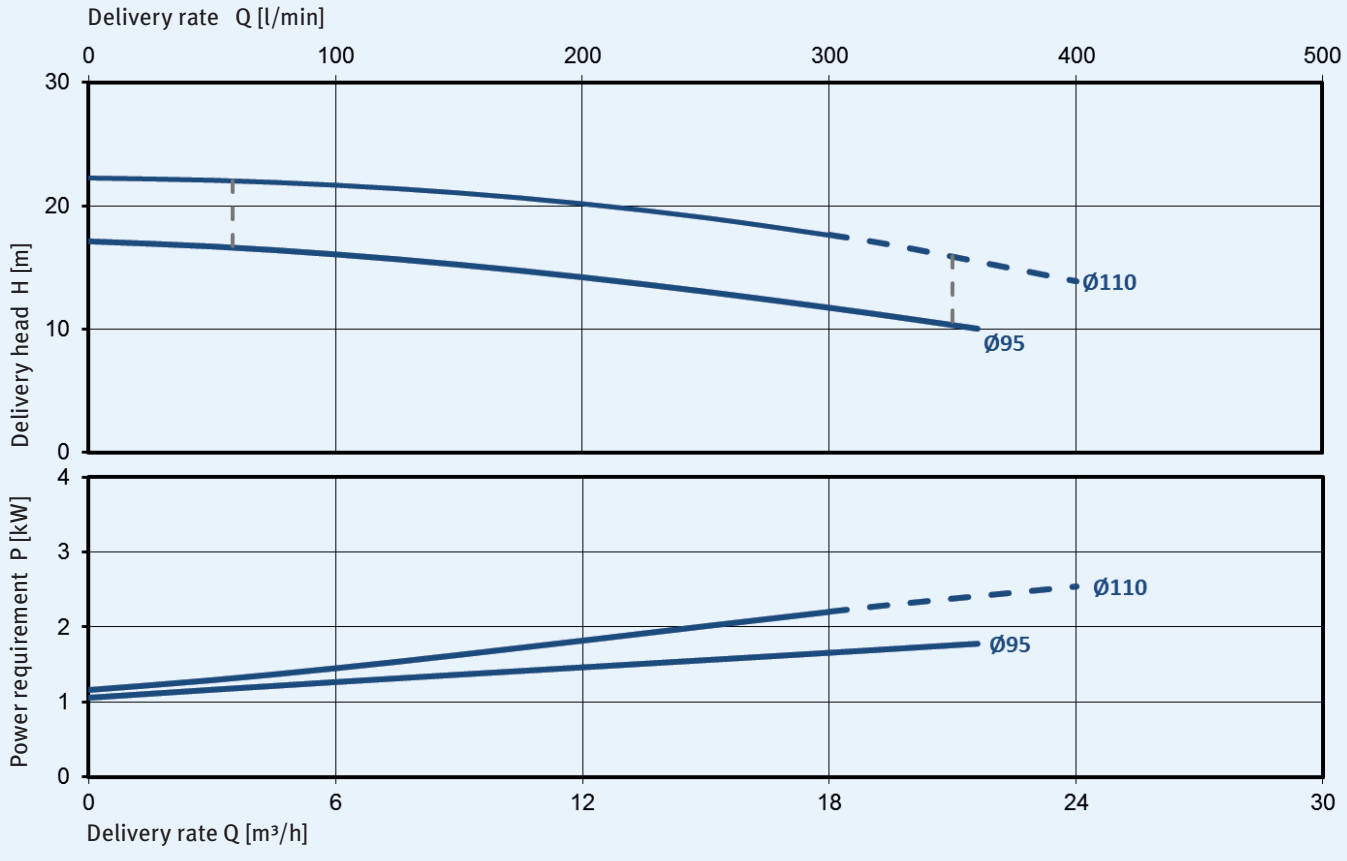

Clean coolant pumps

KNOLL clean coolant pumps TG are cooling lubricant pumps that convey slightly contaminated media. These pumps are able to supply machines with cleaned cooling lubricant (incl. residual dirt).

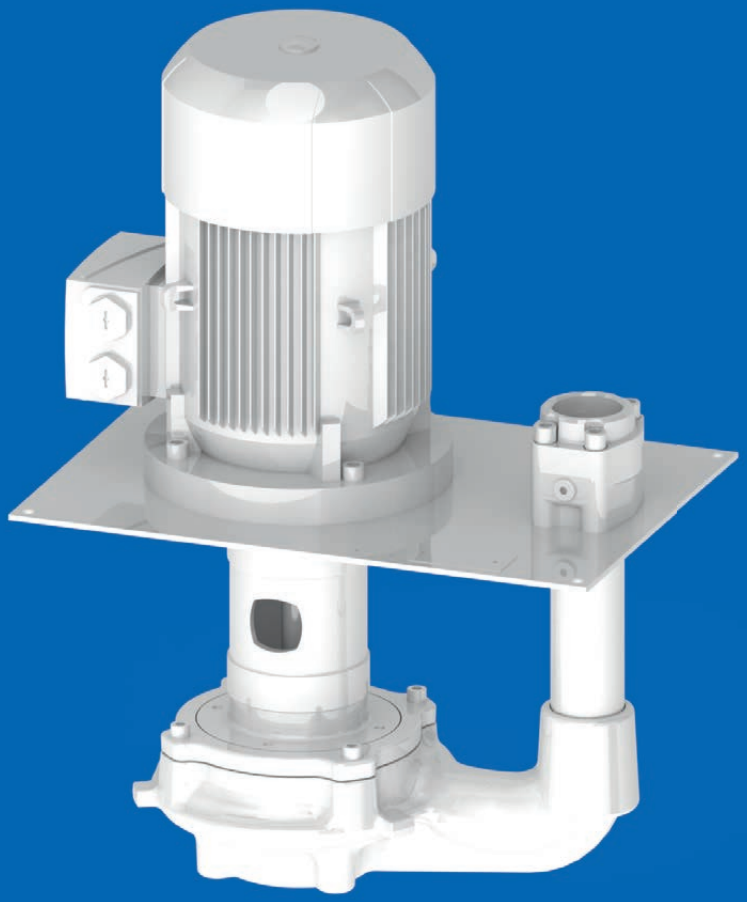

Properties

- No seal
- Flexible design with standard motor
- Energy efficient in conjunction with frequency converter
- Very high efficiency thanks to favorably shaped impeller for optimal flow behavior
- Impeller material POM/GJL-250

Dimensions

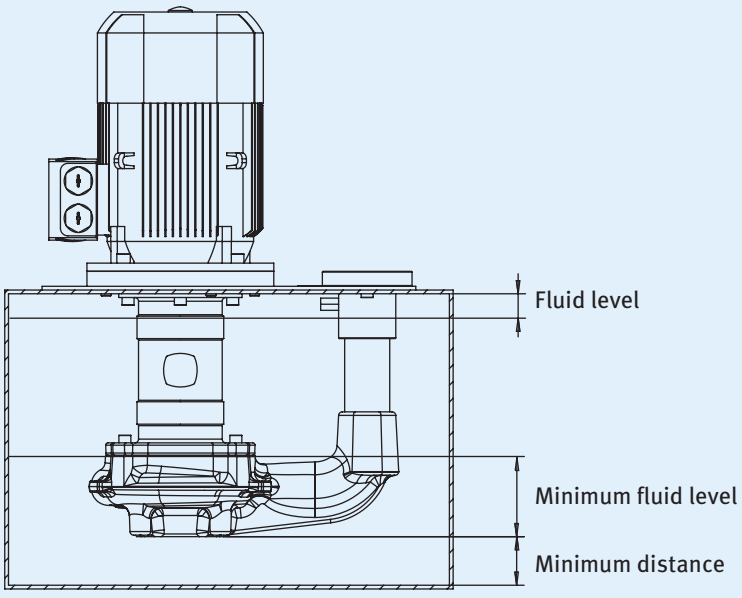

Maximum performance data

Type	Air portion Vol.-%	Delivery rate [l/min]	Delivery head [m]	Particle size [mm]	Chip length [mm]
TG 25	10	200	59	2	4
TG 30	10	350	28	1	3
TG 40	10	400	32	3	6
TG 50	10	1000	40	6	25

Fluid level

Type	Minimum distance [mm]	Minimum fluid level [mm]	Fluid level [mm]
TG 25	40	80	40
TG 30	60	60	40
TG 40	60	60	40
TG 50	65	105	40

Characteristic curve

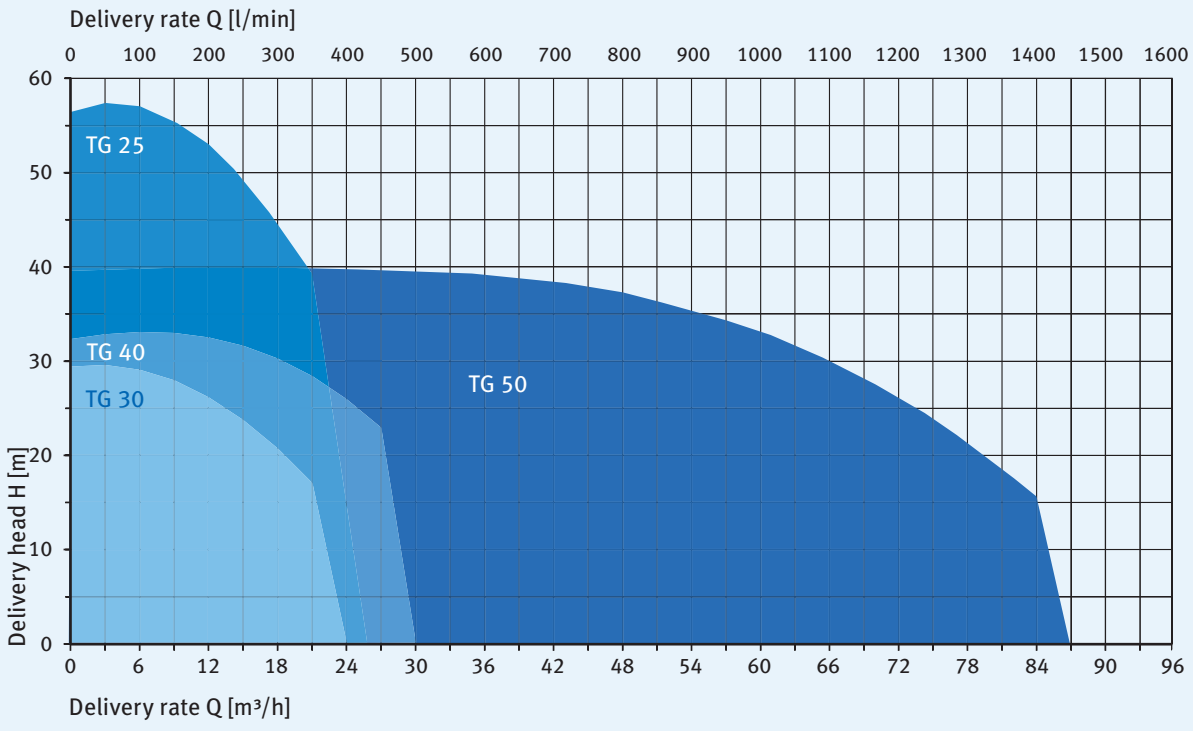

Clean coolant pump TG 25

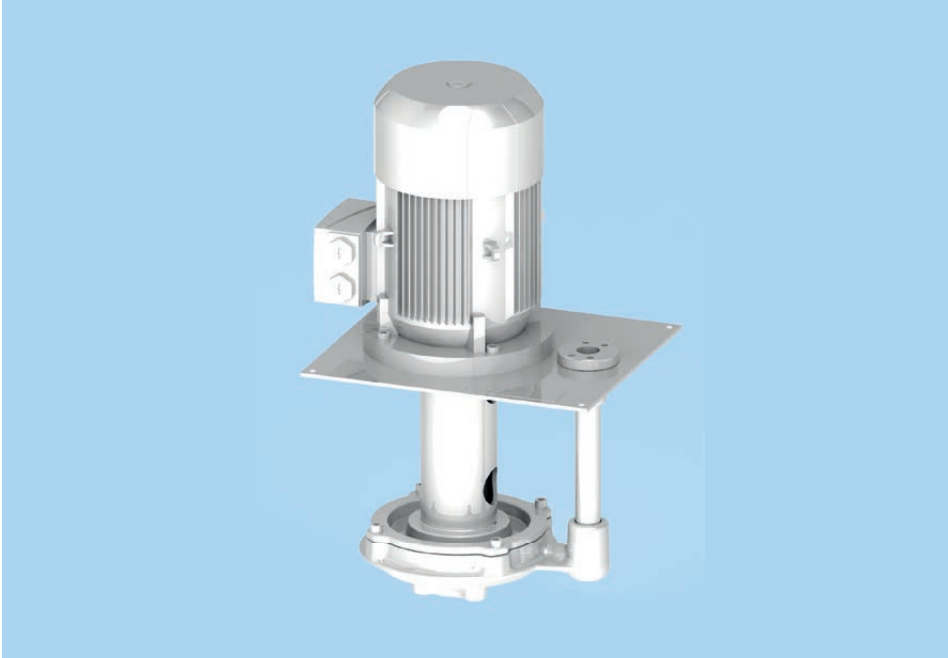

Variants

Type	T [mm]	H [mm]	Weight [kg]	Frequency [Hz]	Motor power (Nema Premium) [kW]	Noise level [dB(A)]
TG 25-70/30 332	332	391	57	50	3.0	67
TG 25-00/40 332	332	374	57	50	4.0	69
TG 25-70/30 580	580	391	74	50	3.0	67
TG 25-00/40 580	580	374	74	50	4.0	69
TG 25-45/30 332	332	391	57	60	3.45 (3.0)	71
TG 25-60/40 332	332	374	57	60	4.55 (3.7)	73
TG 25-45/30 580	580	391	74	60	3.45 (3.0)	71
TG 25-60/40 580	580	374	74	60	4.55 (3.7)	73

Dimensions

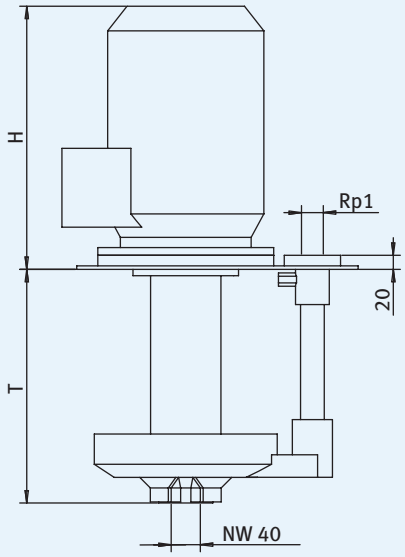

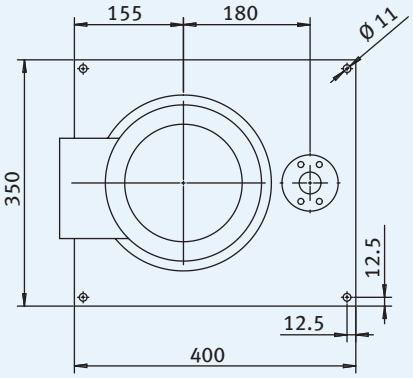

Characteristic curves for 2,900 min^{-1}, 50 Hz, 1 mm²/s

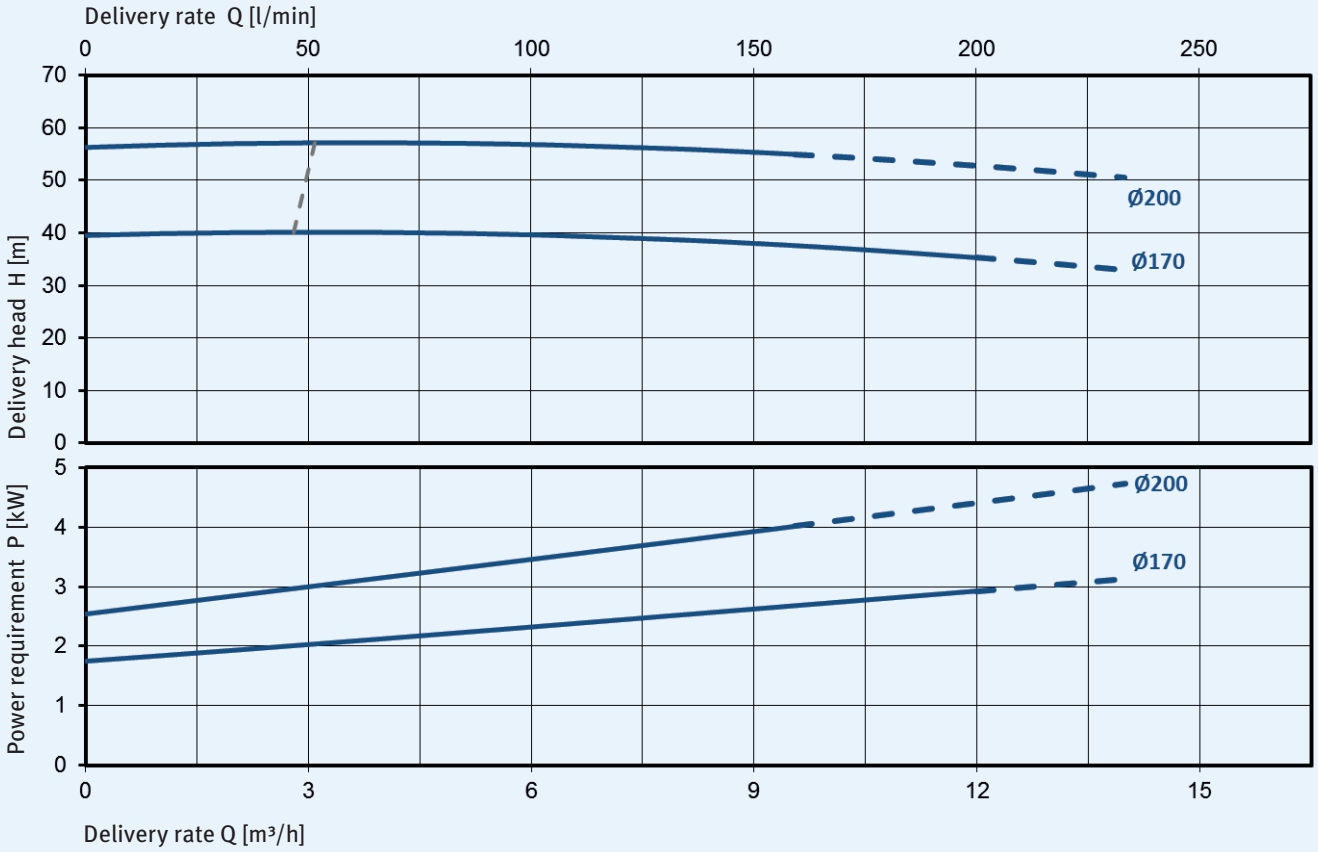

Characteristic curves for 3,500 min^{-1}, 60 Hz, 1 mm²/s

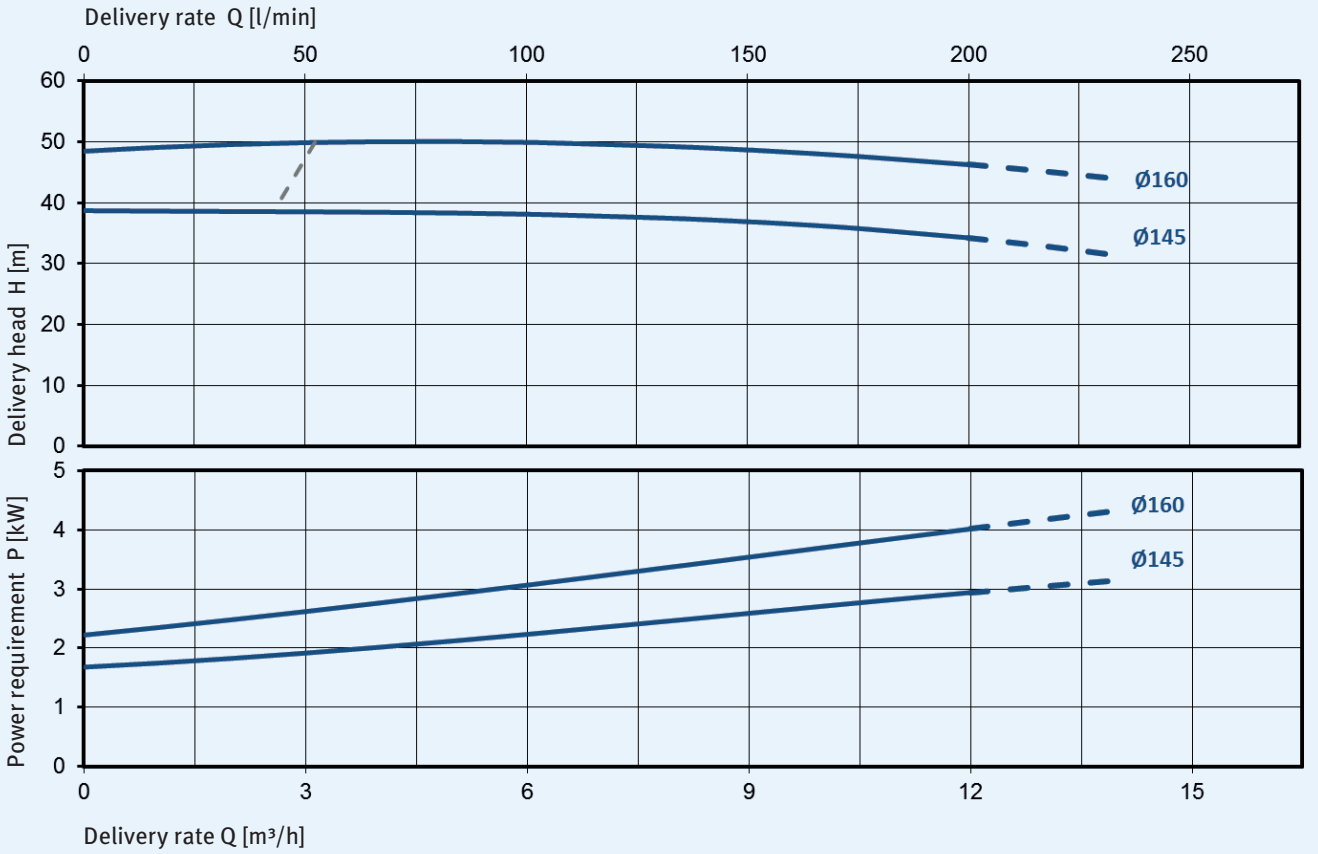

Clean coolant pump TG 30

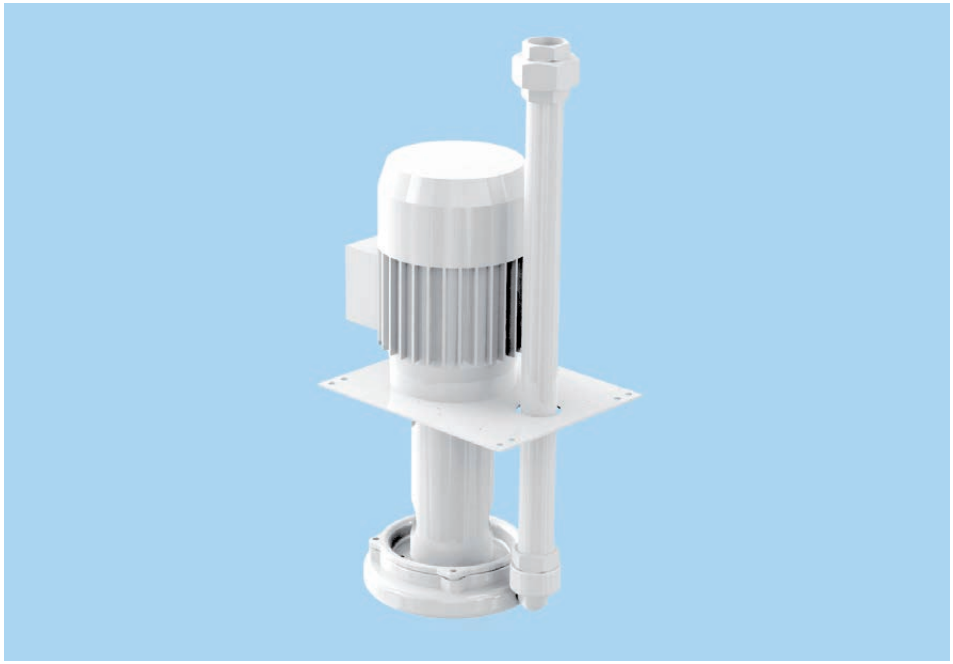

Variants

Type	T [mm]	H [mm]	Weight [kg]	Frequency [Hz]	Motor power [kW]	Noise level [dB(A)]
TG 30-../07 285	285	250	23	50	0.75	60
TG 30-../11 285	285	250	24	50 / 60	1.10	60 / 63
TG 30-../15 285	285	285	27	50 / 60	1.50	62 / 65
TG 30-../22 285	285	285	30	50 / 60	2.20	62 / 65
TG 30-../07 533	533	250	30	50	0.75	60
TG 30-../11 533	533	250	31	50 / 60	1.10	60 / 63
TG 30-../15 533	533	285	34	50 / 60	1.50	62 / 65
TG 30-../22 533	533	285	37	50 / 60	2.20	62 / 65
TG 30-../15 781	781	285	41	50 / 60	1.50	62 / 65
TG 30-../22 781	781	285	44	50 / 60	2.20	62 / 65

Dimensions

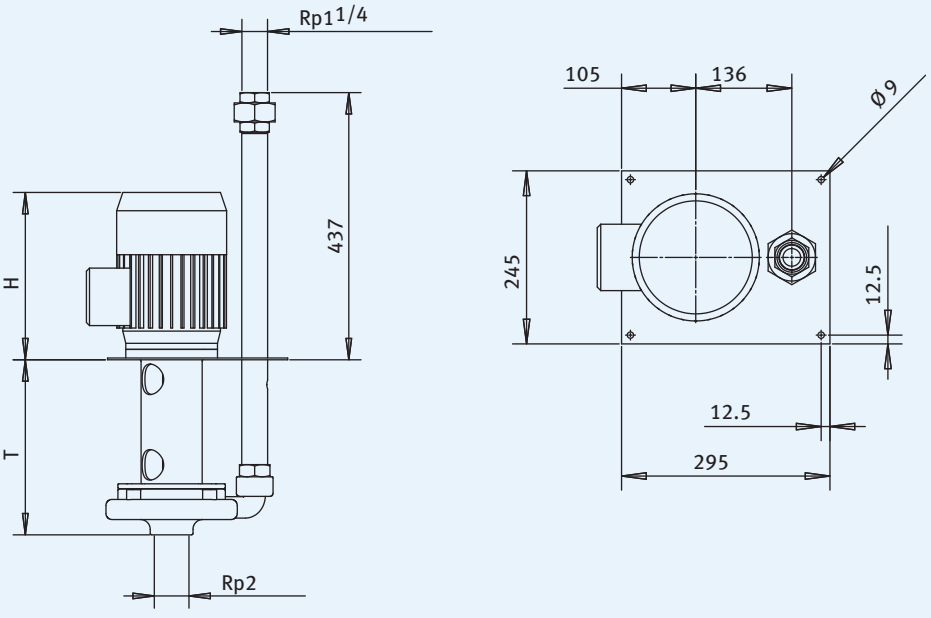

Characteristic curves for 2,900 min^{-1}, 50 Hz, 1 mm^2/s

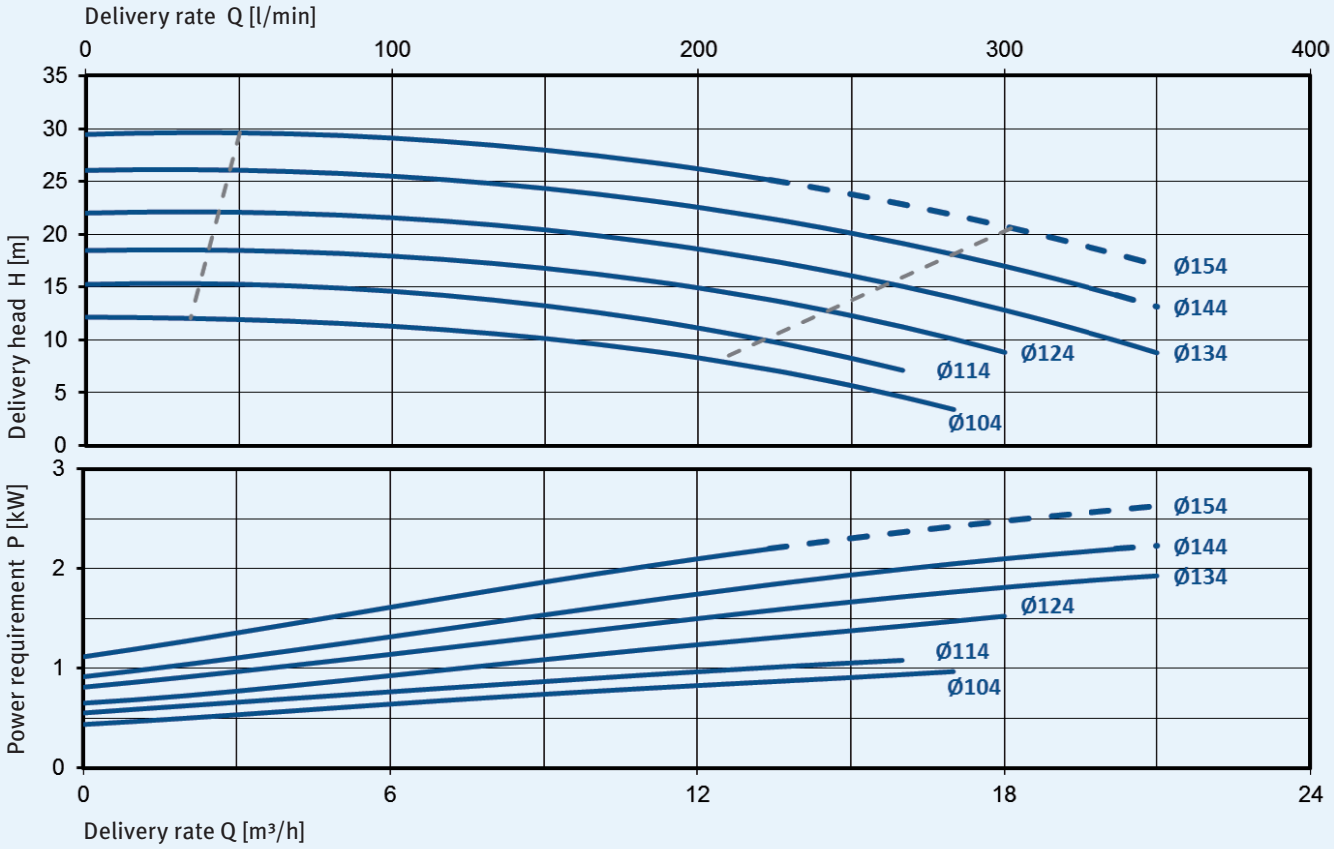

Characteristic curves for 3,500 min^{-1}, 60 Hz, 1 mm^2/s

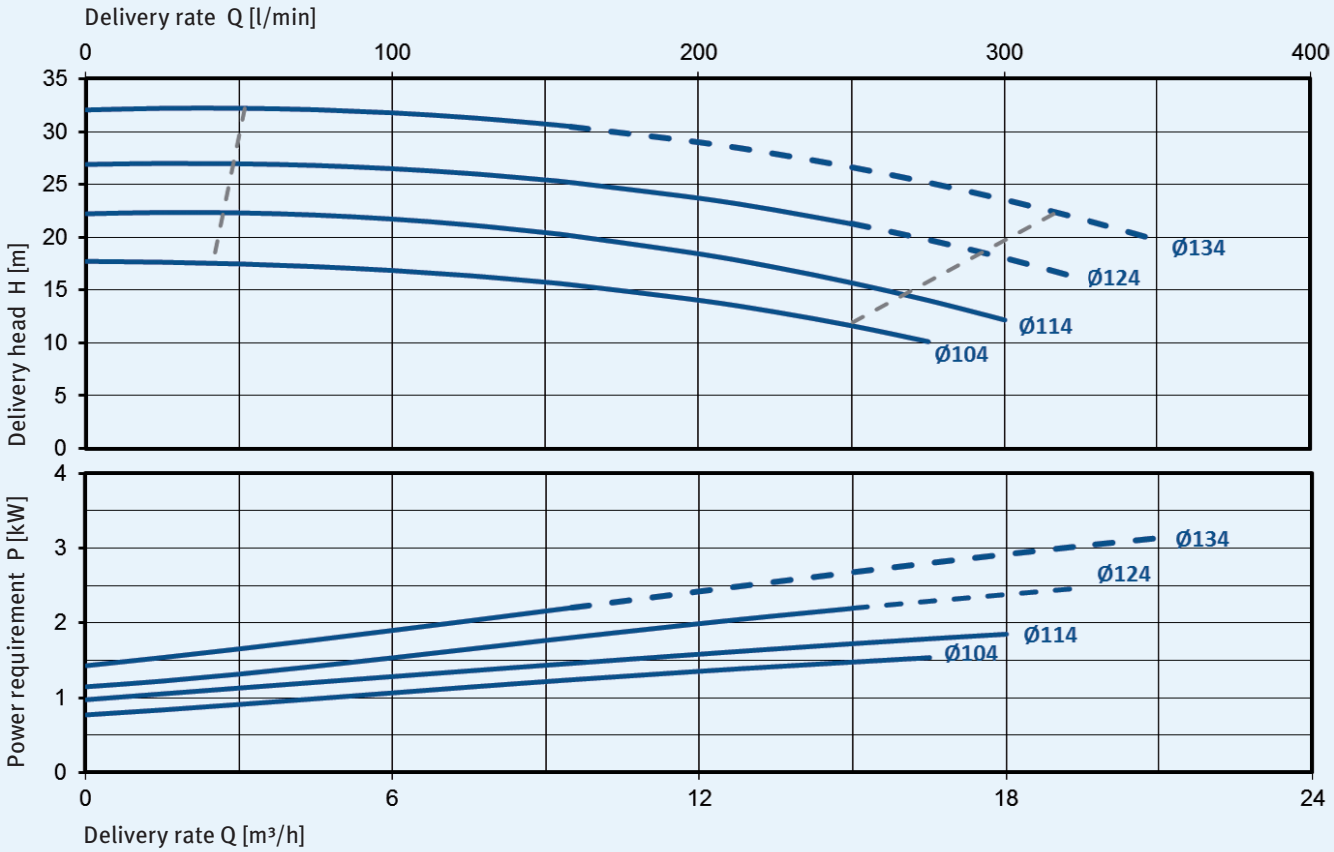

Clean coolant pump TG 40

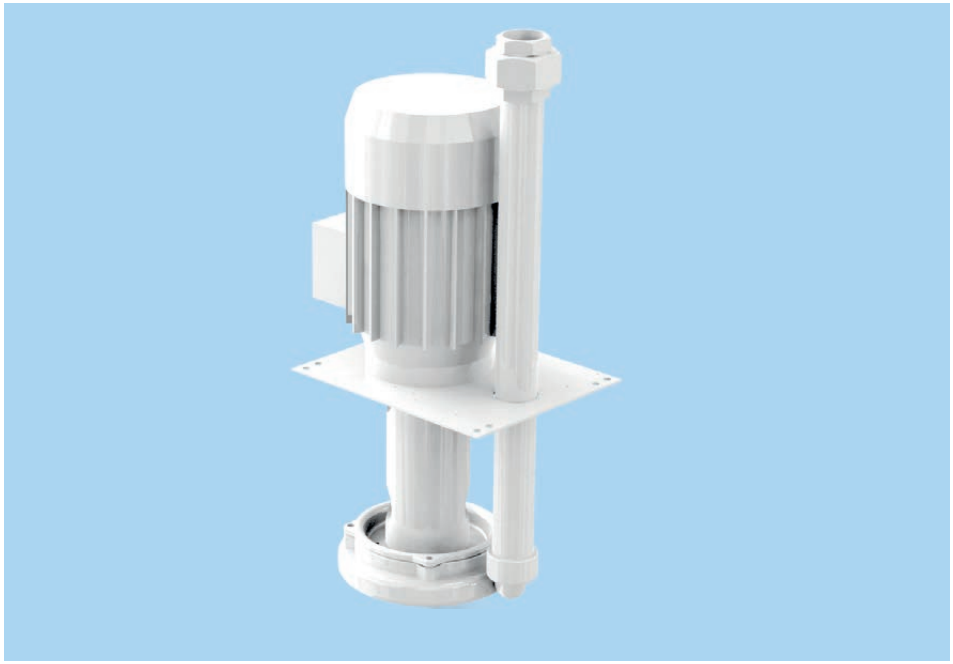

Variants

Type	T [mm]	H [mm]	Weight [kg]	Frequency [Hz]	Motor power [kW]	Noise level [dB(A)]
TG 40-../11 285	285	250	25	50	1.1	60
TG 40-../15 285	285	285	28	50 / 60	1.5	62 / 65
TG 40-../22 285	285	285	31	50 / 60	2.2	62 / 65
TG 40-../30 285	285	325	35	50 / 60	3.0	66 / 69
TG 40-../11 533	533	250	32	50	1.1	60
TG 40-../15 533	533	285	35	50 / 60	1.5	62 / 65
TG 40-../22 533	533	285	38	50 / 60	2.2	62 / 65
TG 40-../30 533	533	325	42	50 / 60	3.0	66 / 69
TG 40-../15 781	781	285	42	50 / 60	1.5	62 / 65
TG 40-../22 781	781	285	45	50 / 60	2.2	66 / 69
TG 40-../30 781	781	325	49	50 / 60	3.0	66 / 69

Dimensions

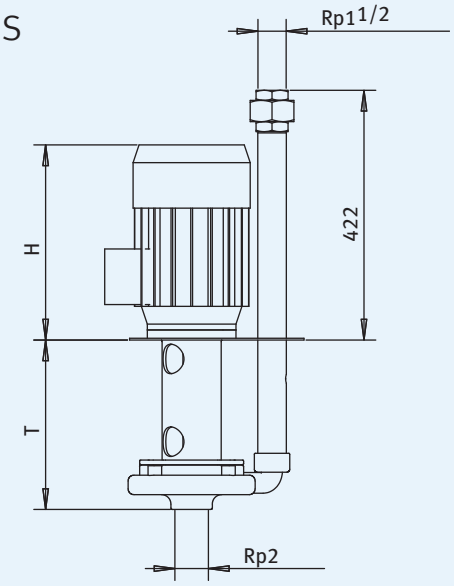

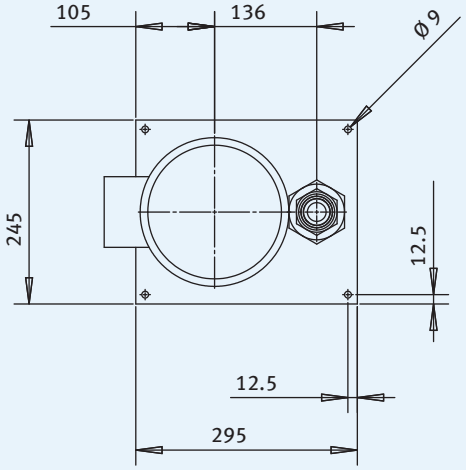

Characteristic curves for 2,900 min^{-1}, 50 Hz, 1 mm²/s

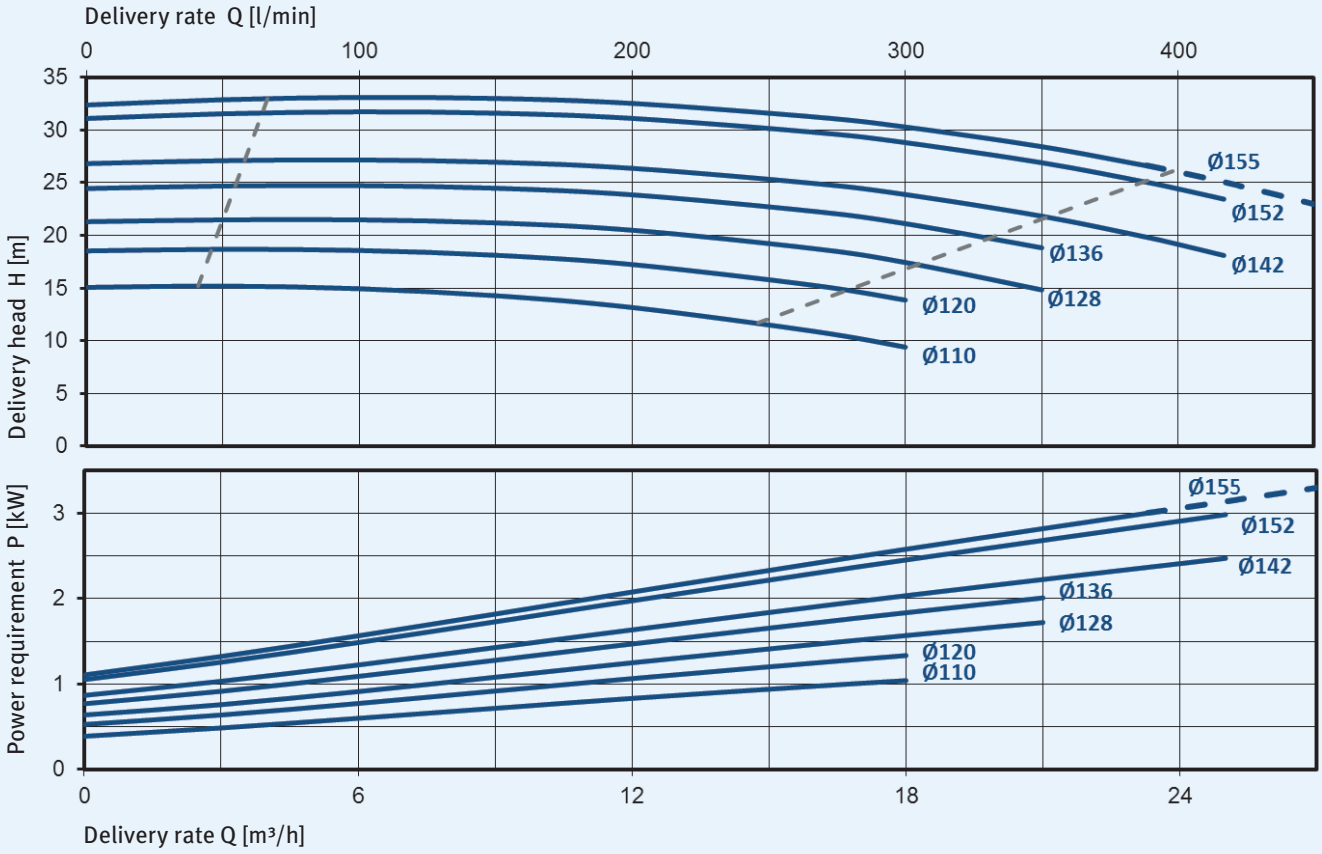

Characteristic curves for 3,500 min^{-1}, 60 Hz, 1 mm²/s

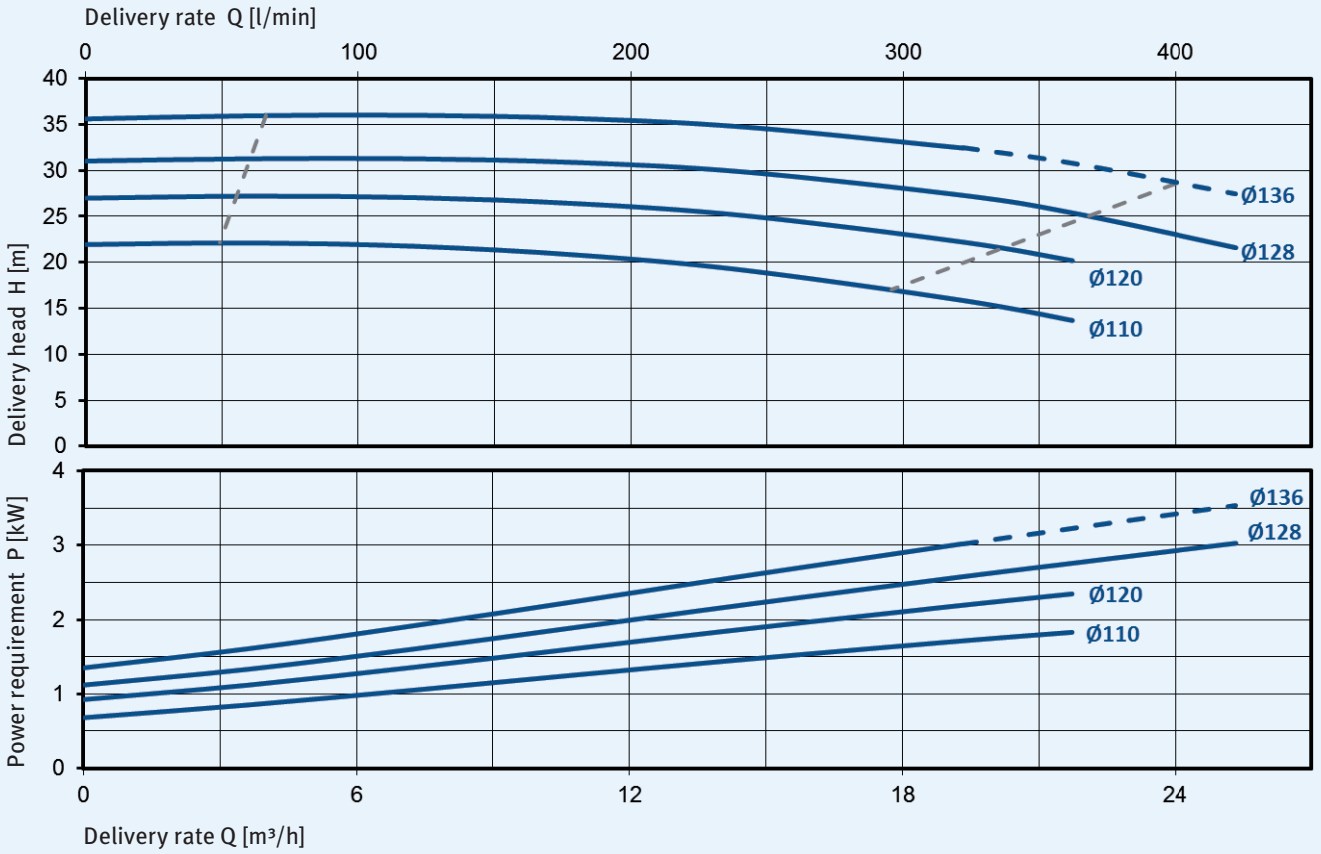

Clean coolant pump TG 50

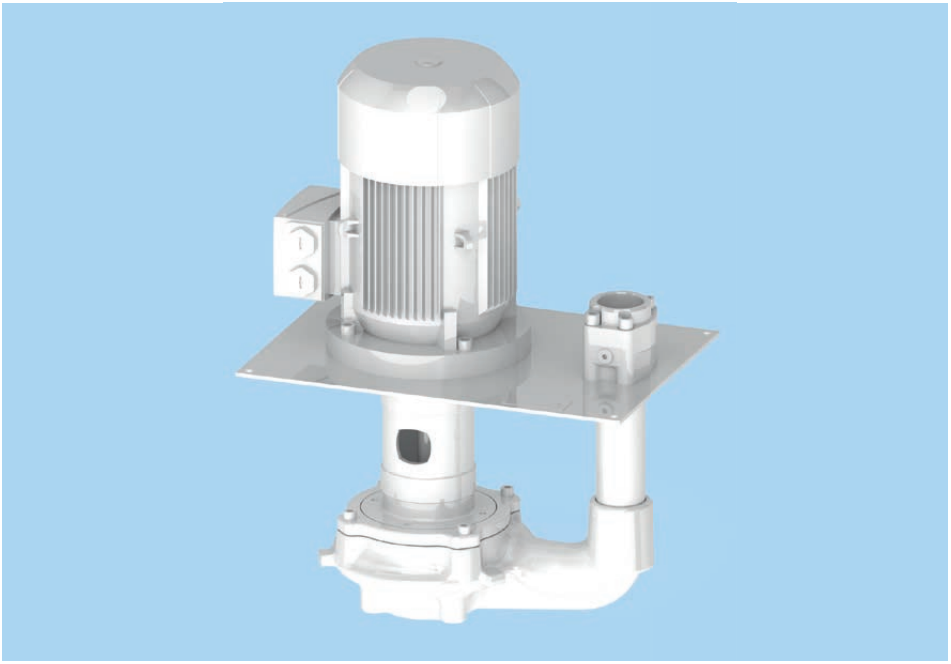

Variants

Type	T* [mm]	H [mm]	Weight [kg]	Frequency [Hz]	Motor power (Nema Premium) [kW]	Noise level [dB(A)]
TG 50-20/40 440	440	379	82	50	4.0	69
TG 50-20/40 880	880	379	98	50	4.0	69
TG 50-35/55 440	440	410	96	50	5.5	68
TG 50-35/55 880	880	410	114	50	5.5	68
TG 50-50/75 440	440	460	111	50	7.5	68
TG 50-50/75 880	880	460	129	50	7.5	68
TG 50-65/75 440	440	460	111	50	7.5	68
TG 50-65/75 880	880	460	130	50	7.5	68
TG 50-20/55 440	440	410	95	60	6.3 (5.5)	72
TG 50-20/55 880	880	410	114	60	6.3 (5.5)	72
TG 50-35/75 440	440	460	110	60	8.6 (7.5)	72
TG 50-35/75 880	880	460	128	60	8.6 (7.5)	72

* The following immersion depths are possible on request: 330 mm, 550 mm, 660 mm and 770 mm

Dimensions

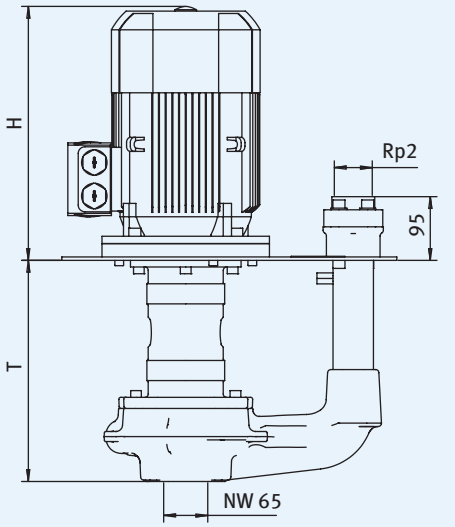

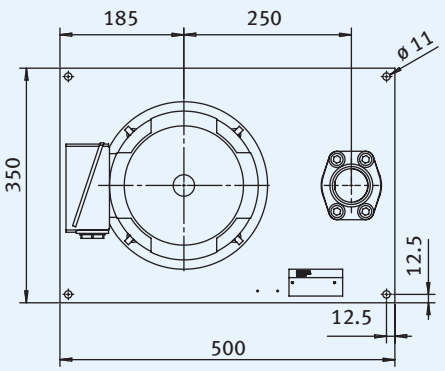

Characteristic curves for 2,900 min^{-1}, 50 Hz, 1 mm^2/s

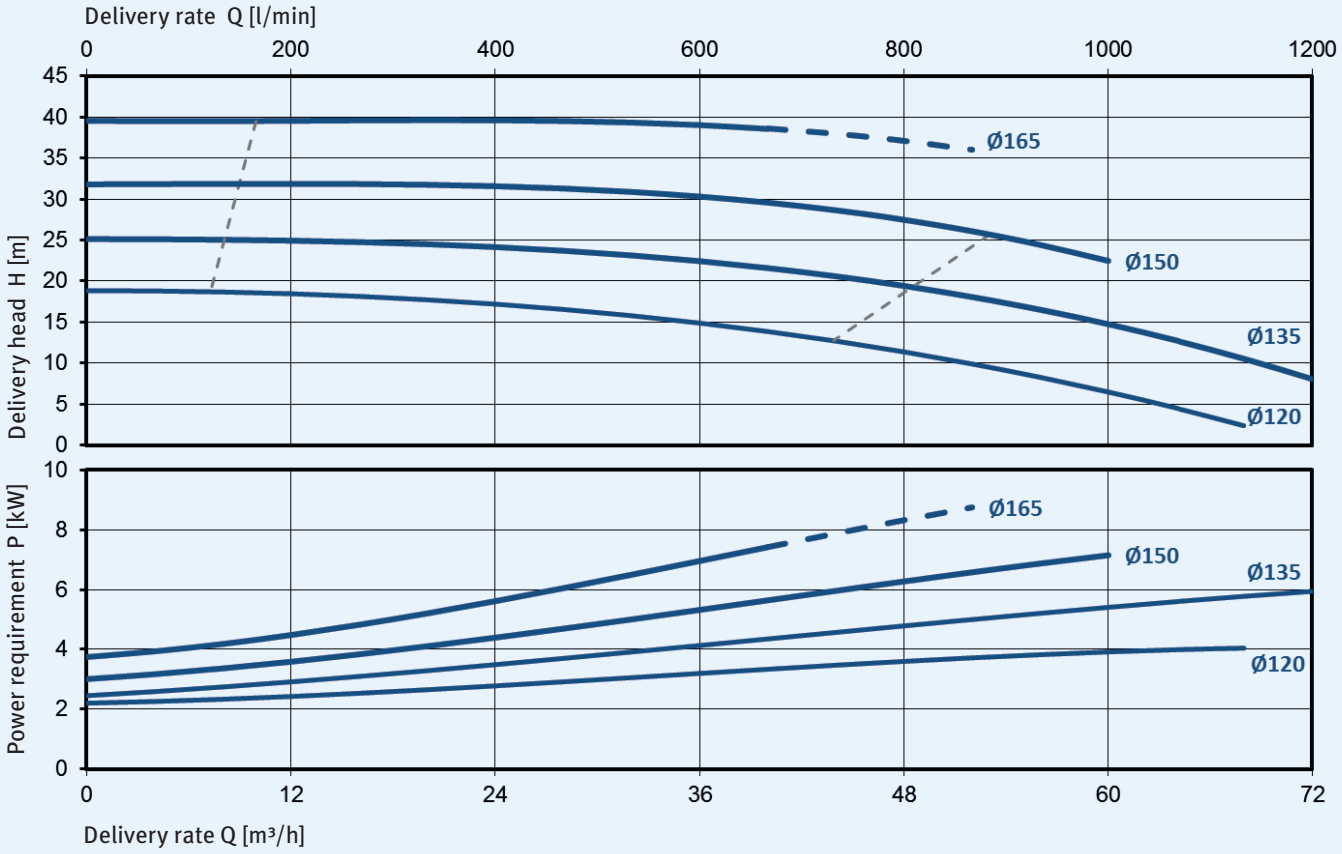

Characteristic curves for 3,500 min^{-1}, 60 Hz, 1 mm^2/s

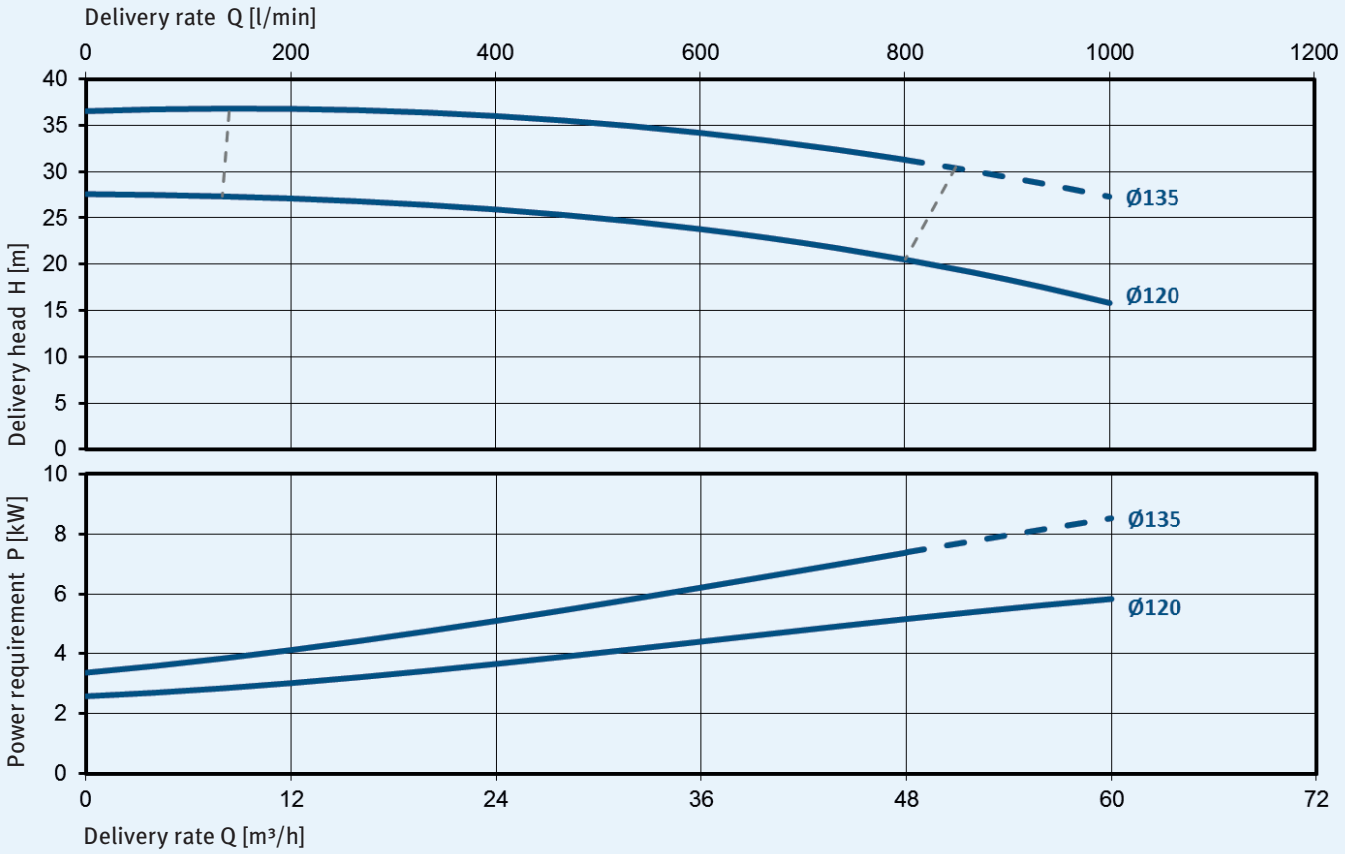

Dirt coolant pumps

KNOLL dirt coolant pumps TF, TS and TSK are cooling lubricant pumps that convey very contaminated media. These pumps are able to transport the chip/cooling lubricant mixture to filters or separators.

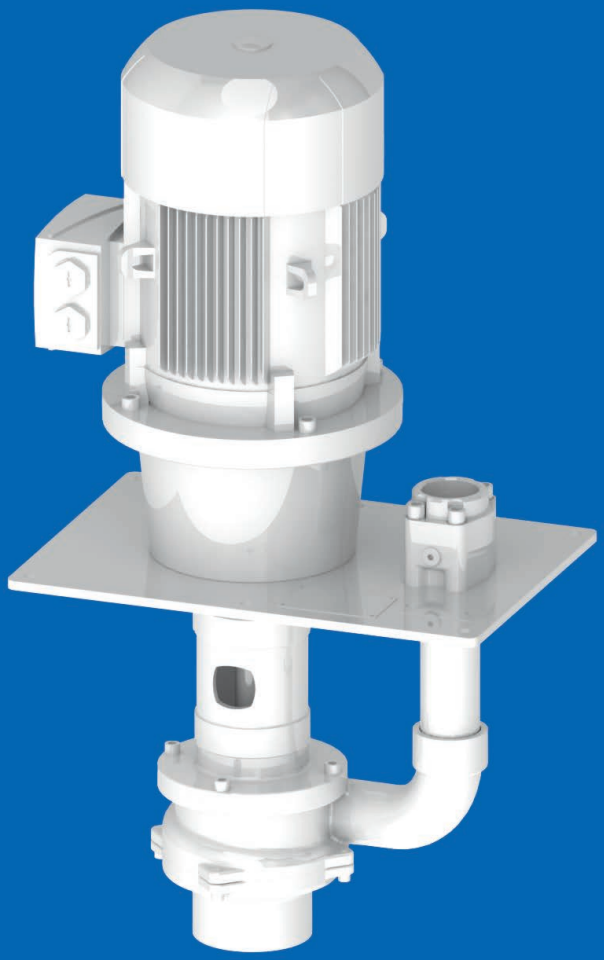

Properties

- No seal
- Flexible design with standard motor
- Energy efficient in conjunction with frequency converter
- Very high efficiency thanks to favorably shaped impeller for optimal flow behavior
- Impeller material POM/GJL-250/ST
- Wear-resistant component design
- With built-on inducer, to improve the intake behavior for media with high air load

Dimensions

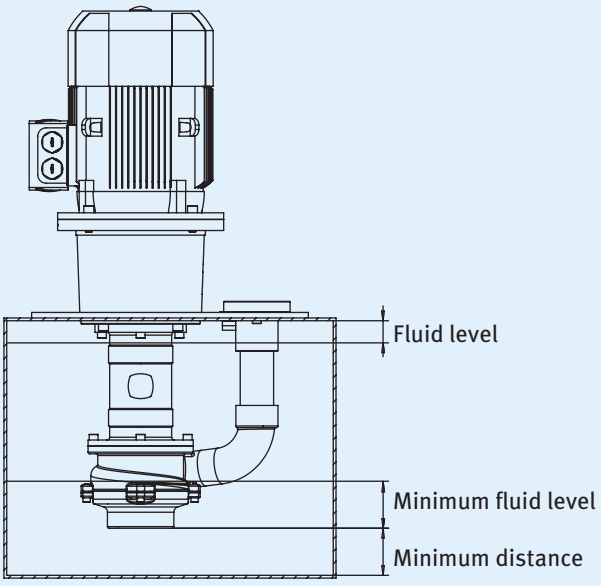

Maximum performance data

Type	Air portion Vol.-%	Delivery rate [l/min]	Delivery head [m]	Particle size [mm]	Chip length [mm]	Chip freight [g/l]
TF 40	10	650	18	15	40	2
TF 50	10	1200	26	30	70	5
TS 40	50	550	18	12	20	2
TSK 40	30	600	17	20	40	5
TSK 50	30	1200	28	20	40	7
TSK 65	30	1500	38	20	40	10

Fluid level

Type	Minimum distance [mm]	Minimum fluid level [mm]	Fluid level [mm]
TF 40	60	110	40
TF 50	75	150	40
TS 40	60	110	40
TSK 40	70	80	40
TSK 50	100	95	40
TSK 65	100	80	40

Characteristic curve

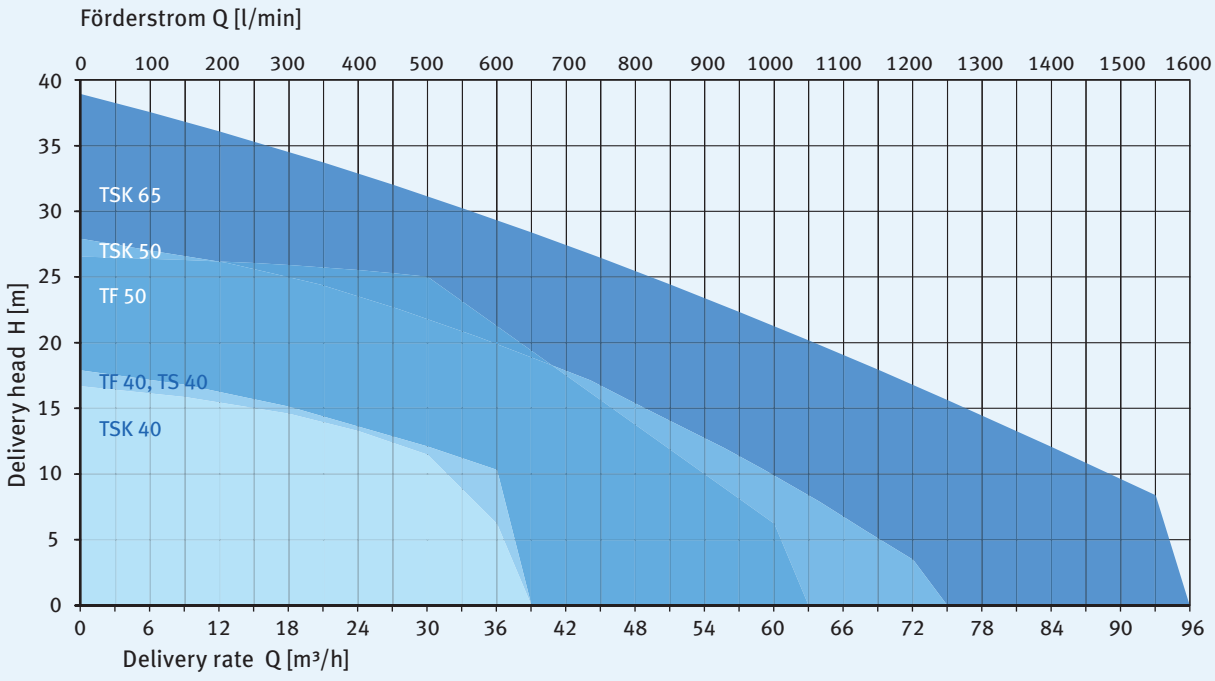

Dirt coolant pump TF 40

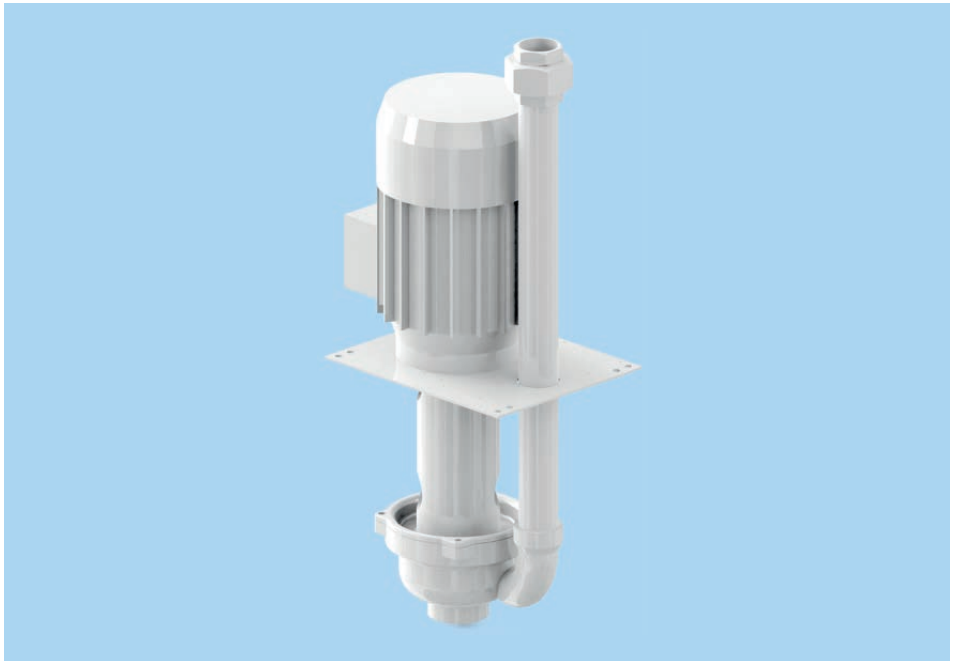

Variants

Type	T [mm]	H [mm]	Weight [kg]	Frequency [Hz]	Motor power [kW]	Noise level [dB(A)]
TF 40-../07 330	330	250	26	50	0.75	60
TF 40-../11 330	330	250	27	50 / 60	1.10	60 / 63
TF 40-../15 330	330	285	30	50 / 60	1.50	62 / 65
TF 40-../22 330	330	285	33	50 / 60	2.20	62 / 65
TF 40-../30 330	330	325	37	50 / 60	3.00	66 / 69
TF 40-../07 578	578	250	33	50	0.75	60
TF 40-../11 578	578	250	34	50 / 60	1.10	60 / 63
TF 40-../15 578	578	285	37	50 / 60	1.50	62 / 65
TF 40-../22 578	578	285	40	50 / 60	2.20	62 / 65
TF 40-../15 826	826	285	44	50 / 60	1.50	62 / 65
TF 40-../22 826	826	285	47	50 / 60	2.20	62 / 65
TF 40-../30 826	826	325	51	50 / 60	3.00	66 / 65

Dimensions

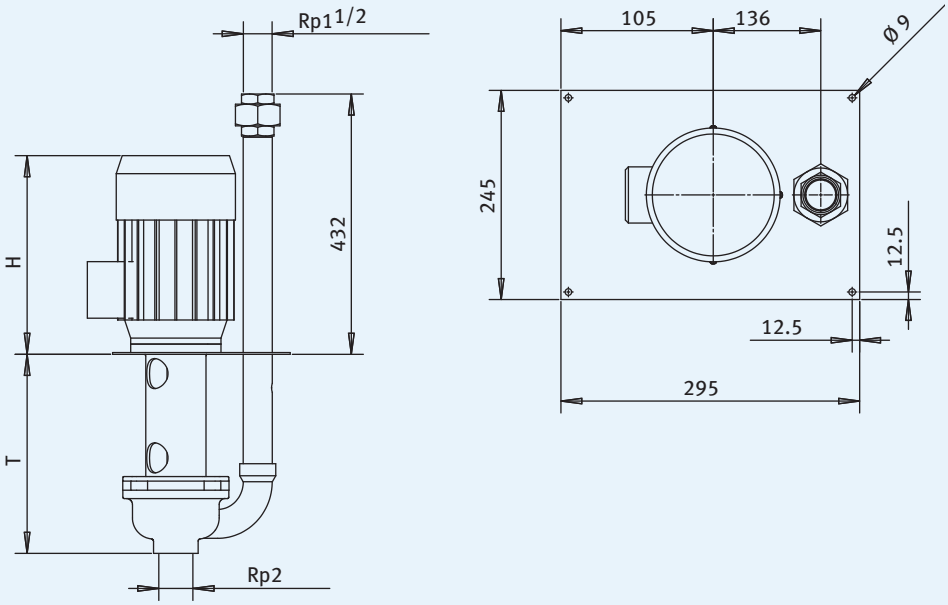

Characteristic curves for 2,900 min^{-1}, 50 Hz, 1 mm²/s

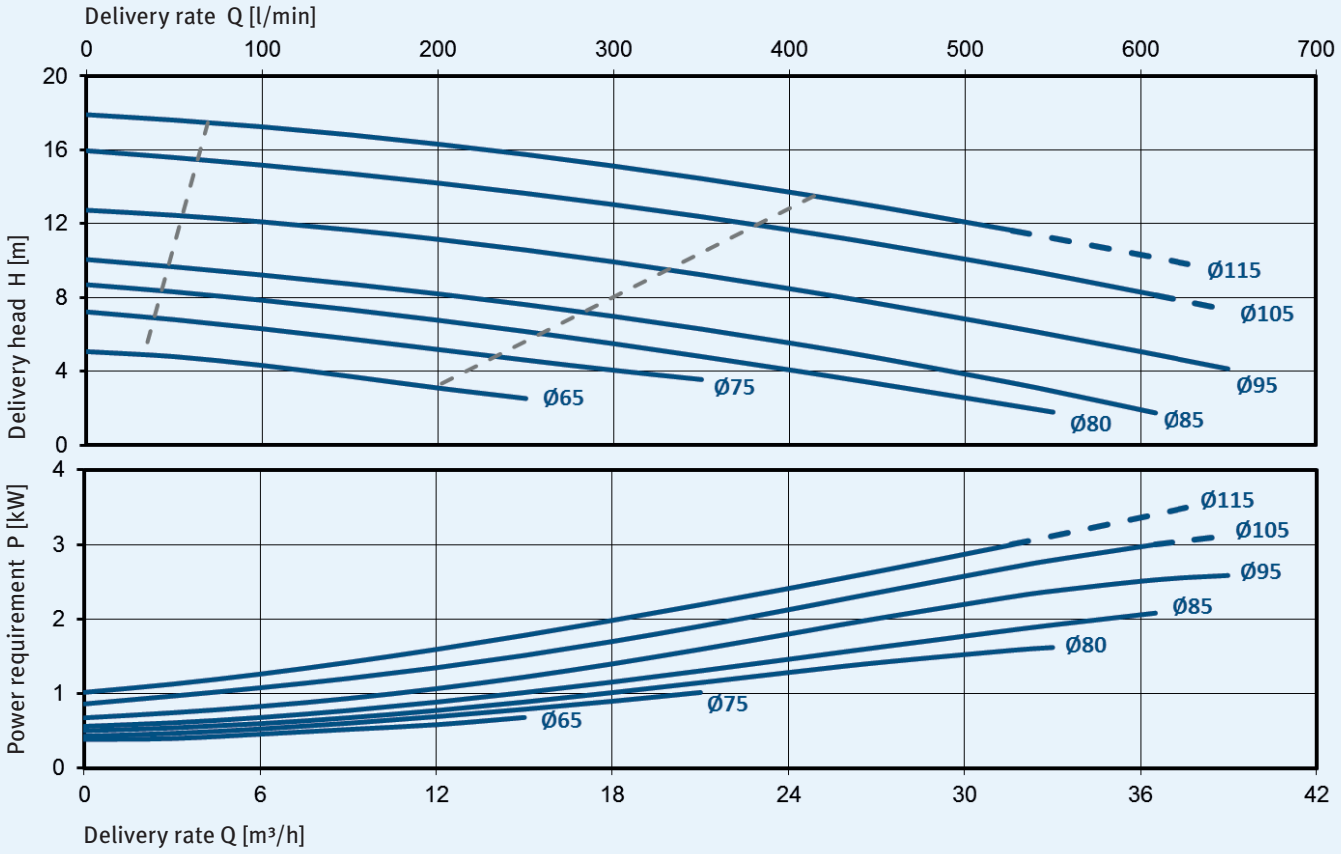

Characteristic curves for 3,500 min^{-1}, 60 Hz, 1 mm²/s

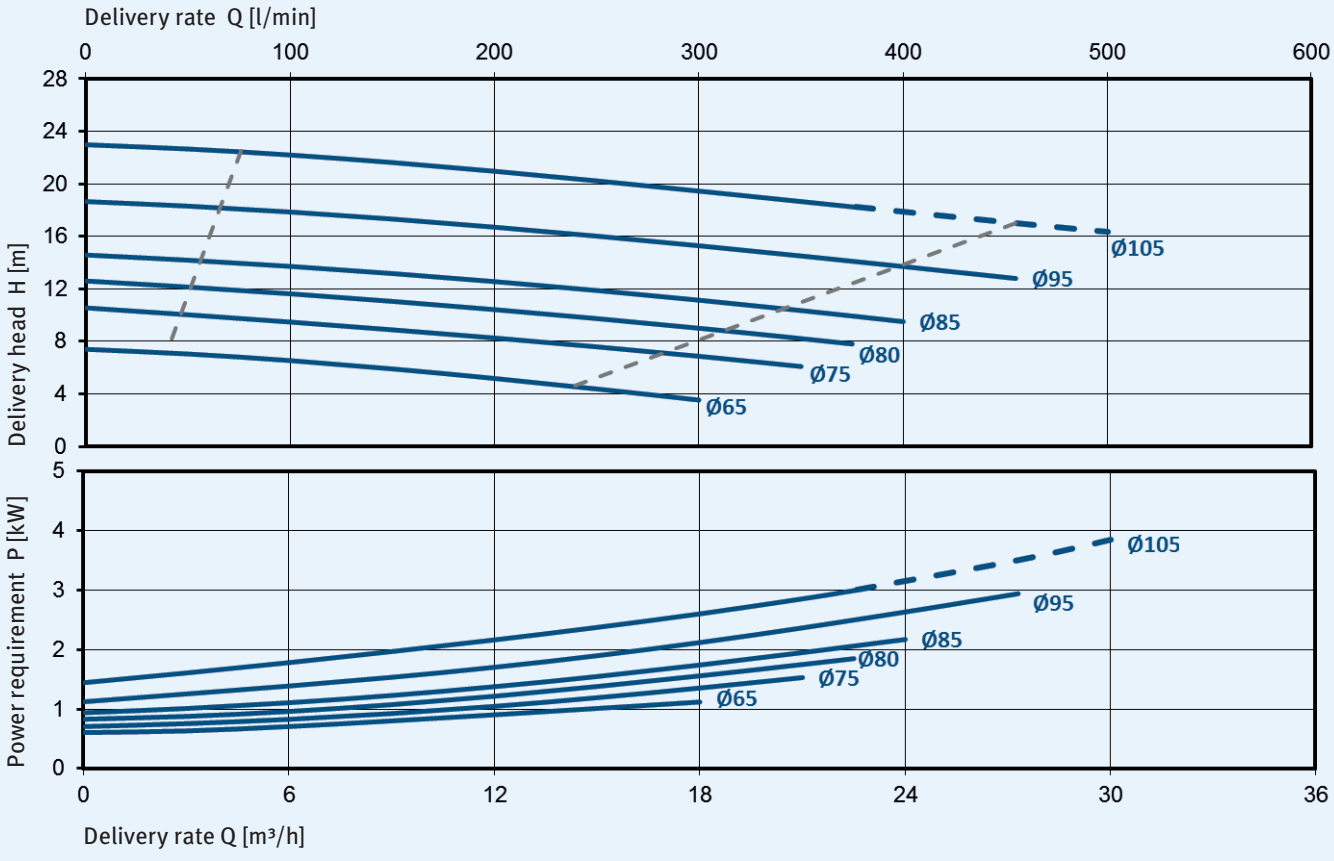

Dirt coolant pump TF 50

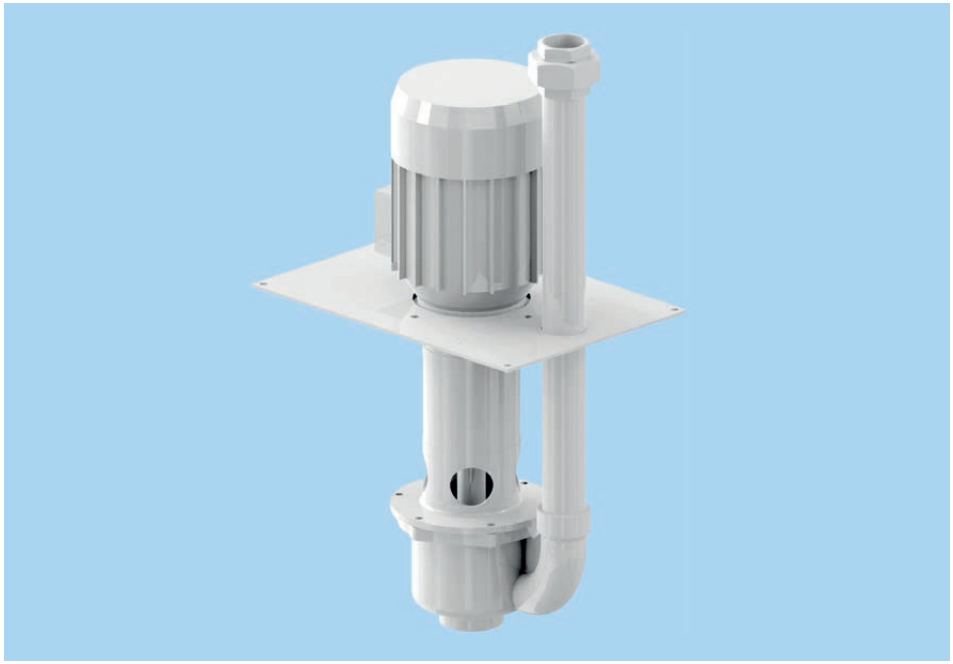

Variants

Type	T [mm]	H [mm]	Weight [kg]	Frequency [Hz]	Motor power [kW]	Noise level [dB(A)]
TF 50-../40 488	488	328	68	50 / 60	4.0	68 / 71
TF 50-../55 488	488	328	75	50 / 60	5.5	68 / 71
TF 50-../40 848	848	328	78	50 / 60	4.0	68 / 71
TF 50-../55 848	848	328	85	50 / 60	5.5	68 / 71

Dimensions

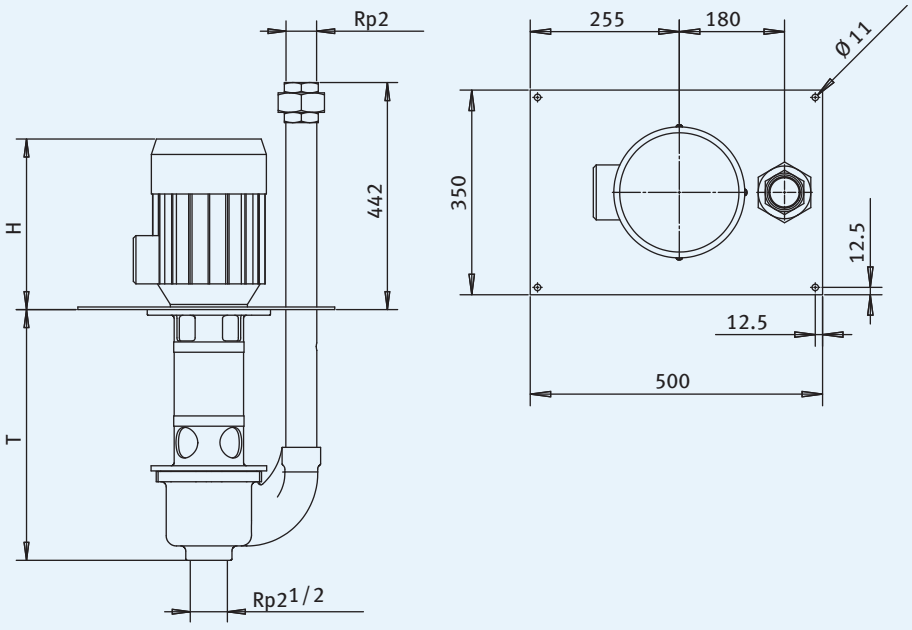

Characteristic curves for 2,900 min^{-1}, 50 Hz, 1 mm²/s

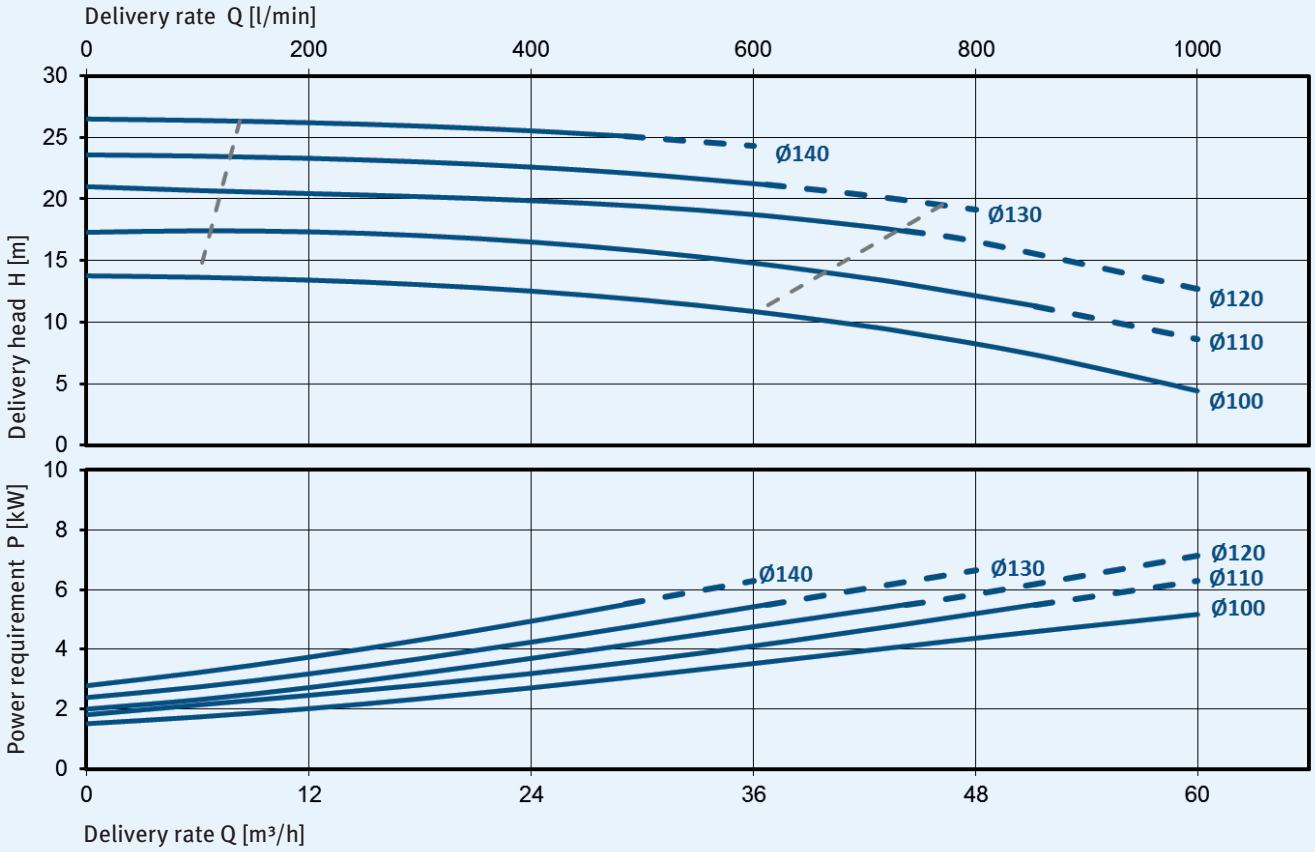

Characteristic curves for 3,500 min^{-1}, 60 Hz, 1 mm²/s

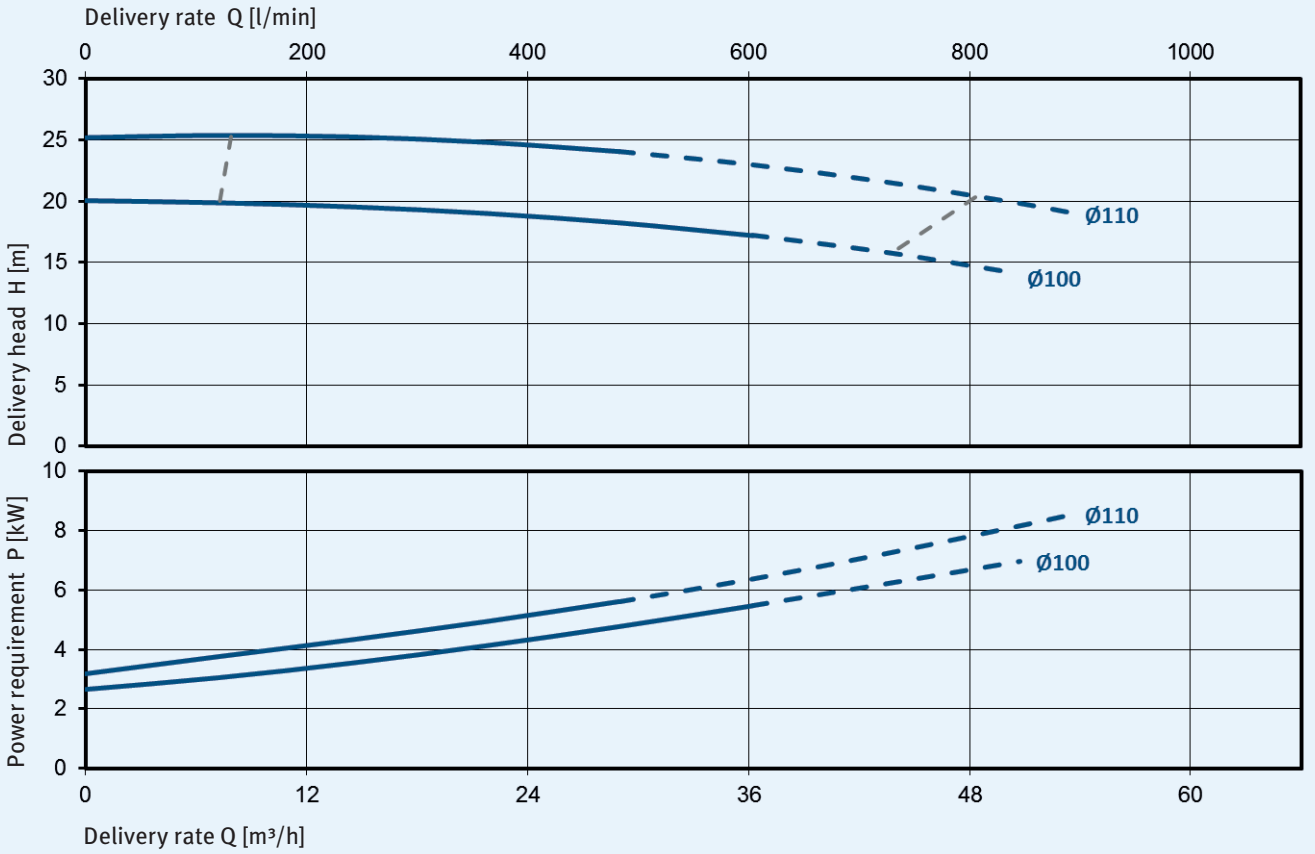

Dirt coolant pump TS 40

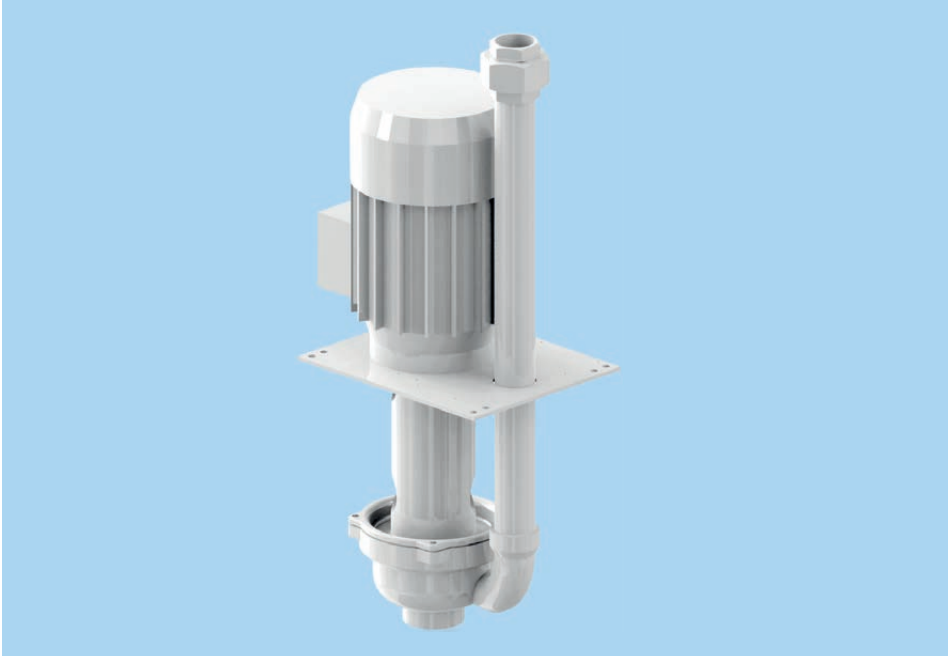

Variants

Type	T [mm]	H [mm]	Weight [kg]	Frequency [Hz]	Motor power [kW]	Noise level [dB(A)]
TS 40-21/22 338	338	285	33	50 / 60	2.2	62 / 65
TS 40-21/30 338	338	325	37	50 / 60	3.0	66 / 69
TS 40-21/22 586	586	285	40	50 / 60	2.2	62 / 65
TS 40-21/30 586	586	325	44	50 / 60	3.0	66 / 69
TS 40-21/22 834	834	285	47	50 / 60	2.2	62 / 65
TS 40-21/30 834	834	325	51	50 / 60	3.0	66 / 69

Dimensions

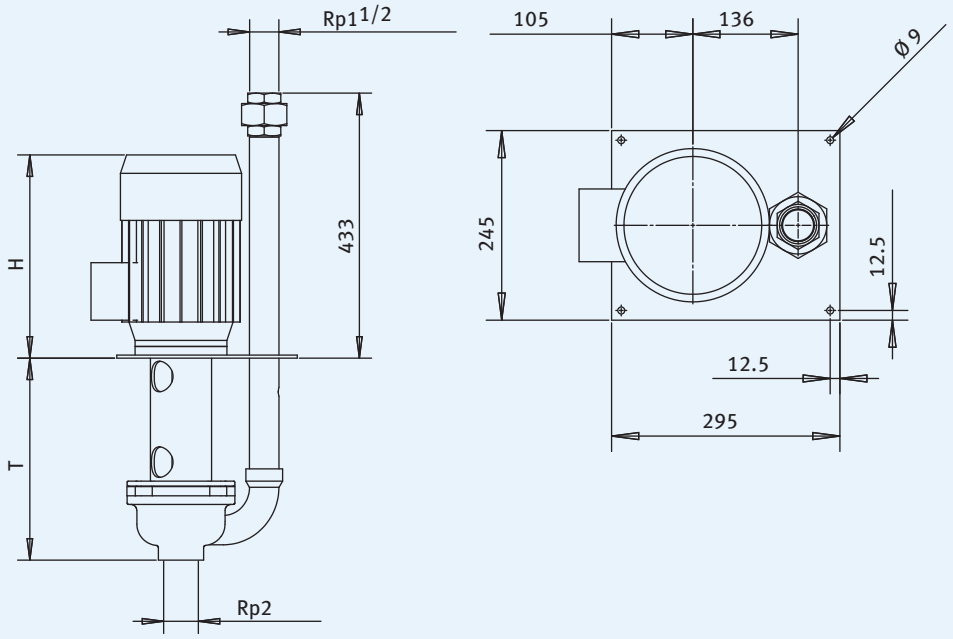

Characteristic curves for 2,900 min^{-1}, 50 Hz, 1 mm²/s

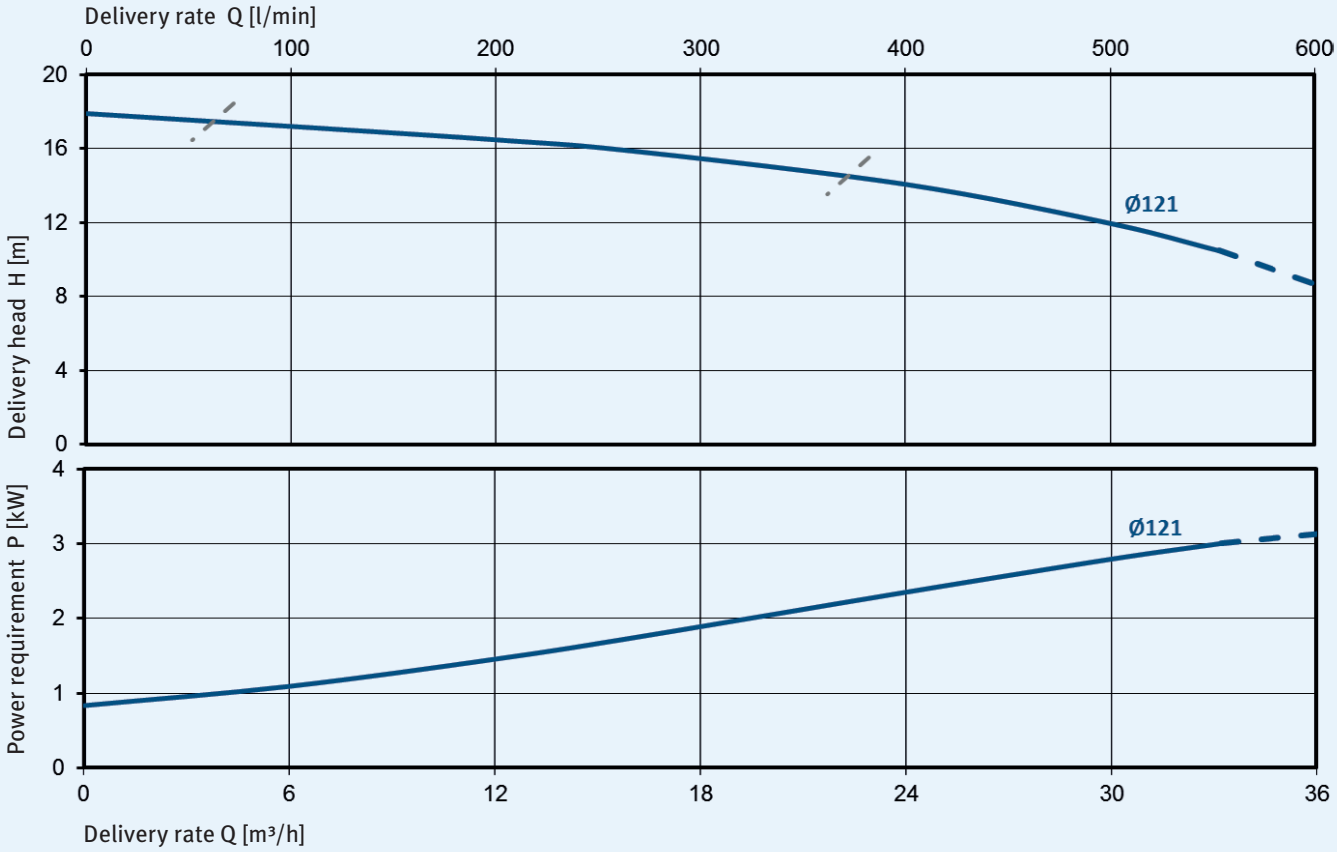

Characteristic curves for 3,500 min^{-1}, 60 Hz, 1 mm²/s

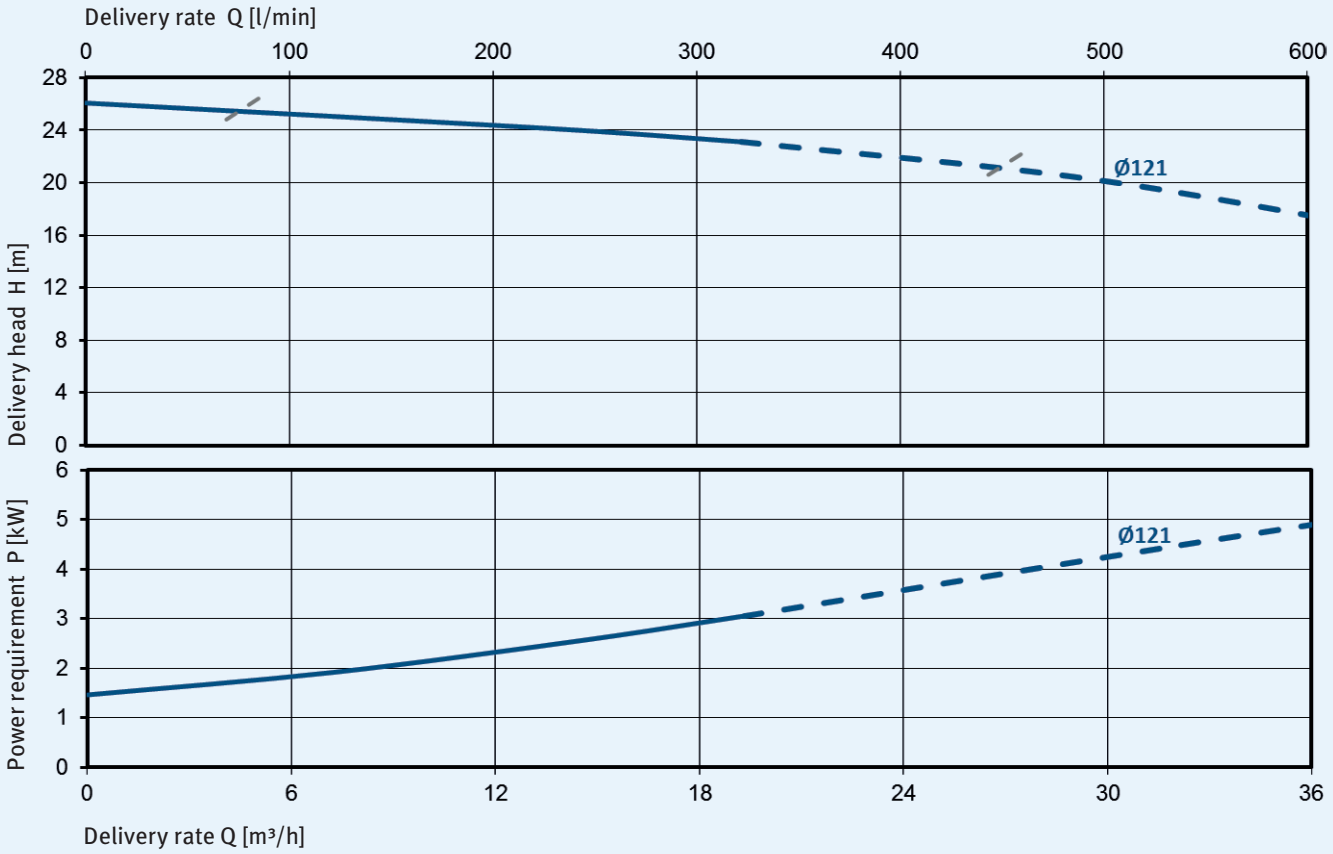

Dirt coolant pump TSK 40

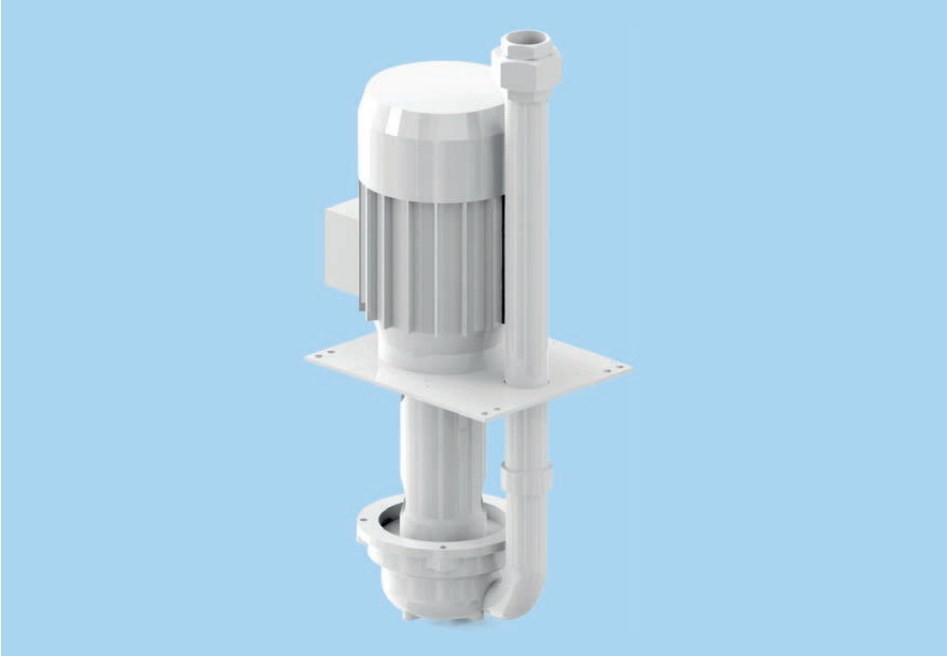

Variants

Type	T [mm]	H [mm]	Weight [kg]	Frequency [Hz]	Motor power [kW]	Noise level [dB(A)]
TSK 40-../22 310	310	285	33	50 / 60	2.2	62 / 65
TSK 40-../30 310	310	325	37	50 / 60	3.0	66 / 69
TSK 40-../22 558	558	285	40	50 / 60	2.2	62 / 65
TSK 40-../30 558	558	325	44	50 / 60	3.0	66 / 69
TSK 40-../22 806	806	285	47	50 / 60	2.2	62 / 65
TSK 40-../30 806	806	325	51	50 / 60	3.0	66 / 69

Dimensions

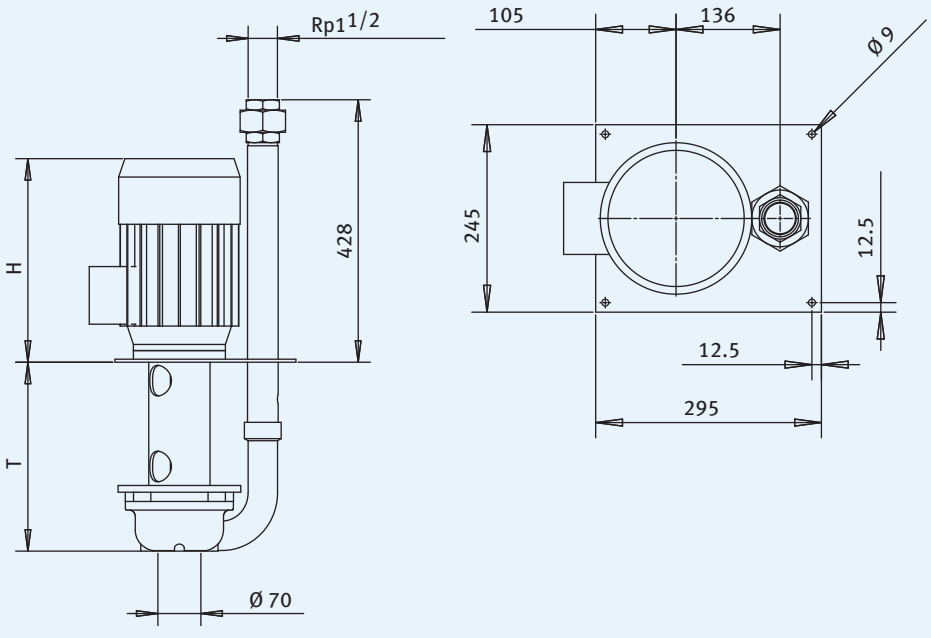

Characteristic curves for 2,900 min^{-1}, 50 Hz, 1 mm^2/s

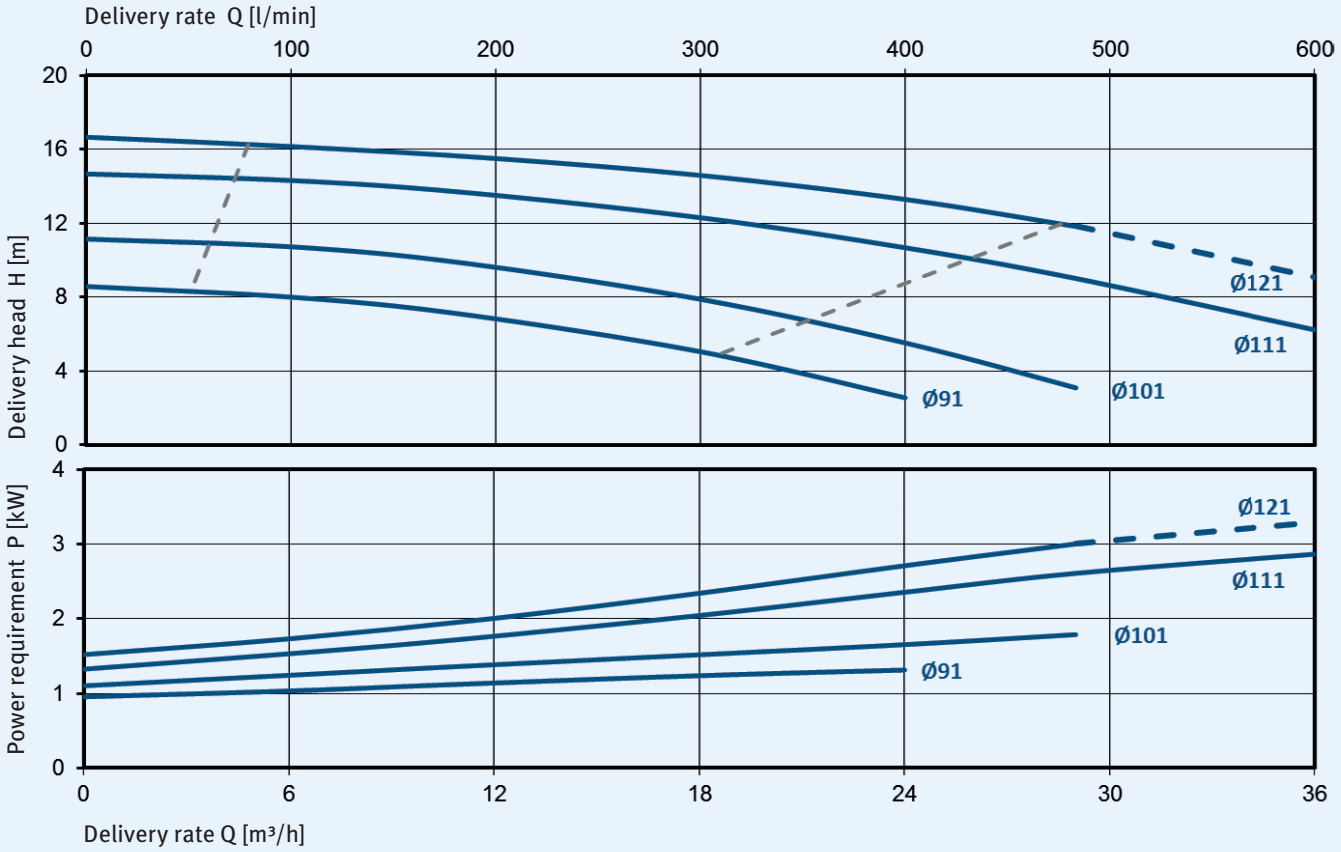

Characteristic curves for 3,500 min^{-1}, 60 Hz, 1 mm^2/s

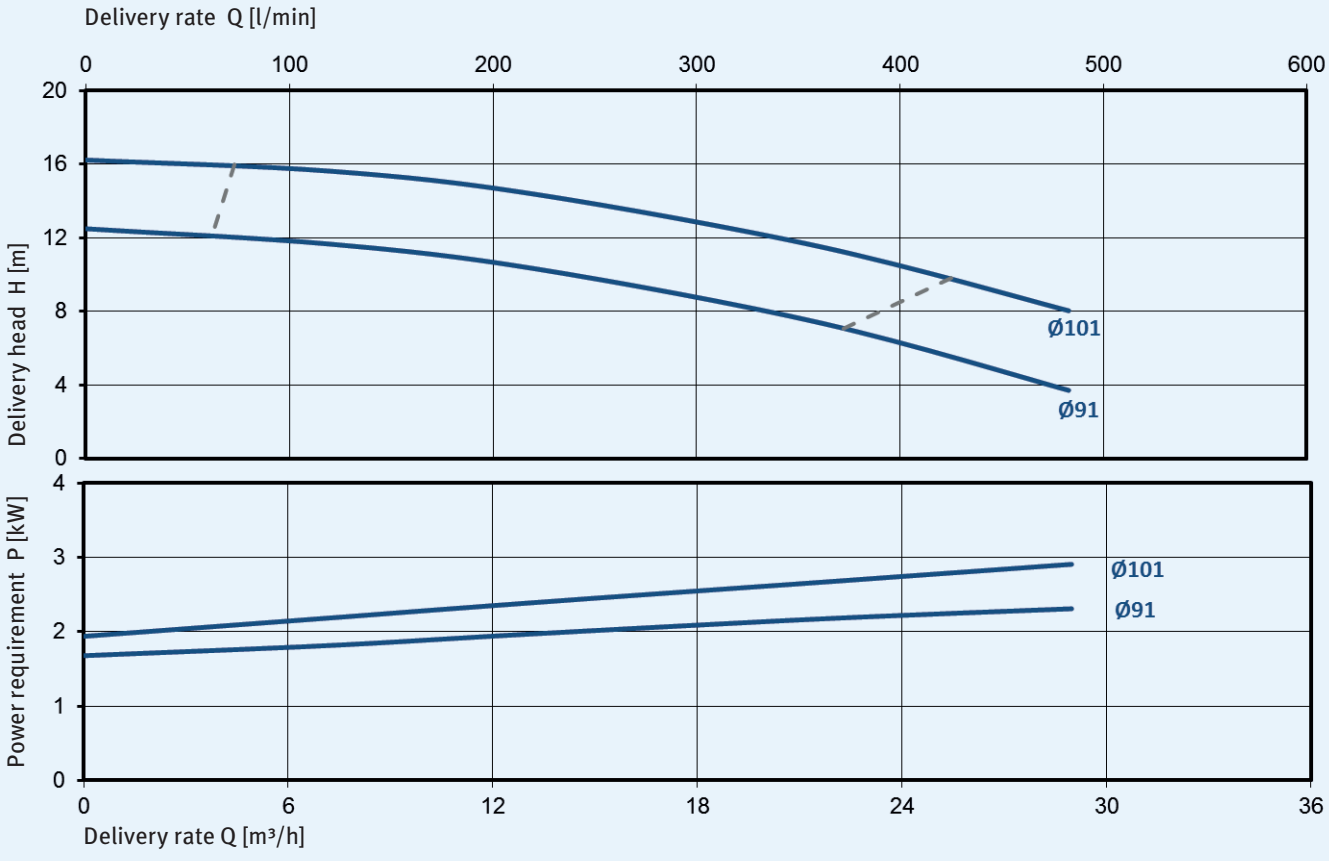

Dirt coolant pump TSK 50

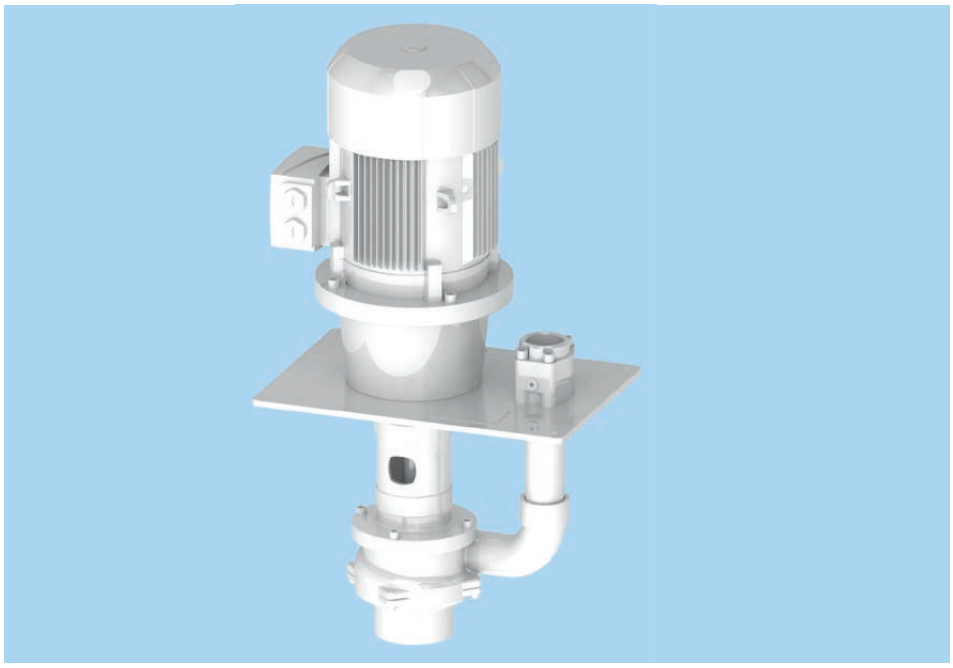

Variants

Type	T [mm]	H [mm]	Weight [kg]	Frequency [Hz]	Motor power (Nema Premium) [kW]	Noise level [dB(A)]
TSK 50-.. / 30 395	395	515	71	50	3.0	67
TSK 50-.. / 30 505	505	515	76	50	3.0	67
TSK 50-.. / 40 395	395	499	81	50 / 60	4.0	69
TSK 50-.. / 40 505	505	499	86	50 / 60	4.0	69
TSK 50-.. / 55 395	395	550	93	50 / 60	5.5	68
TSK 50-.. / 55 505	505	550	98	50 / 60	5.5	68

* The following immersion depths are possible on request: 600 mm, 710 mm and 820 m

Dimensions

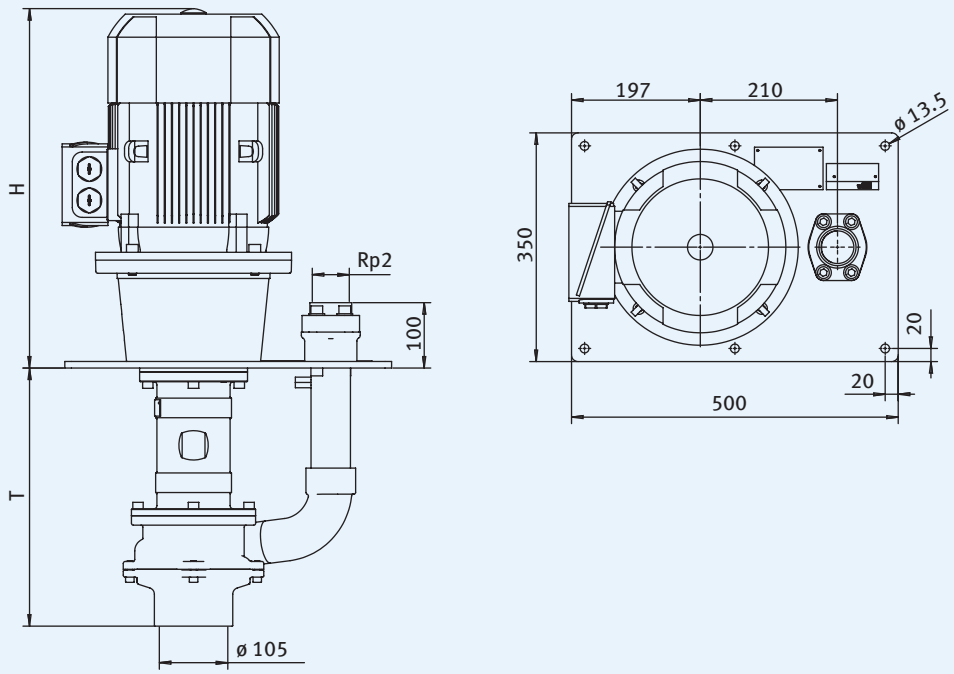

Characteristic curves for 2,900 min^{-1}, 50 Hz, 1 mm^2/s

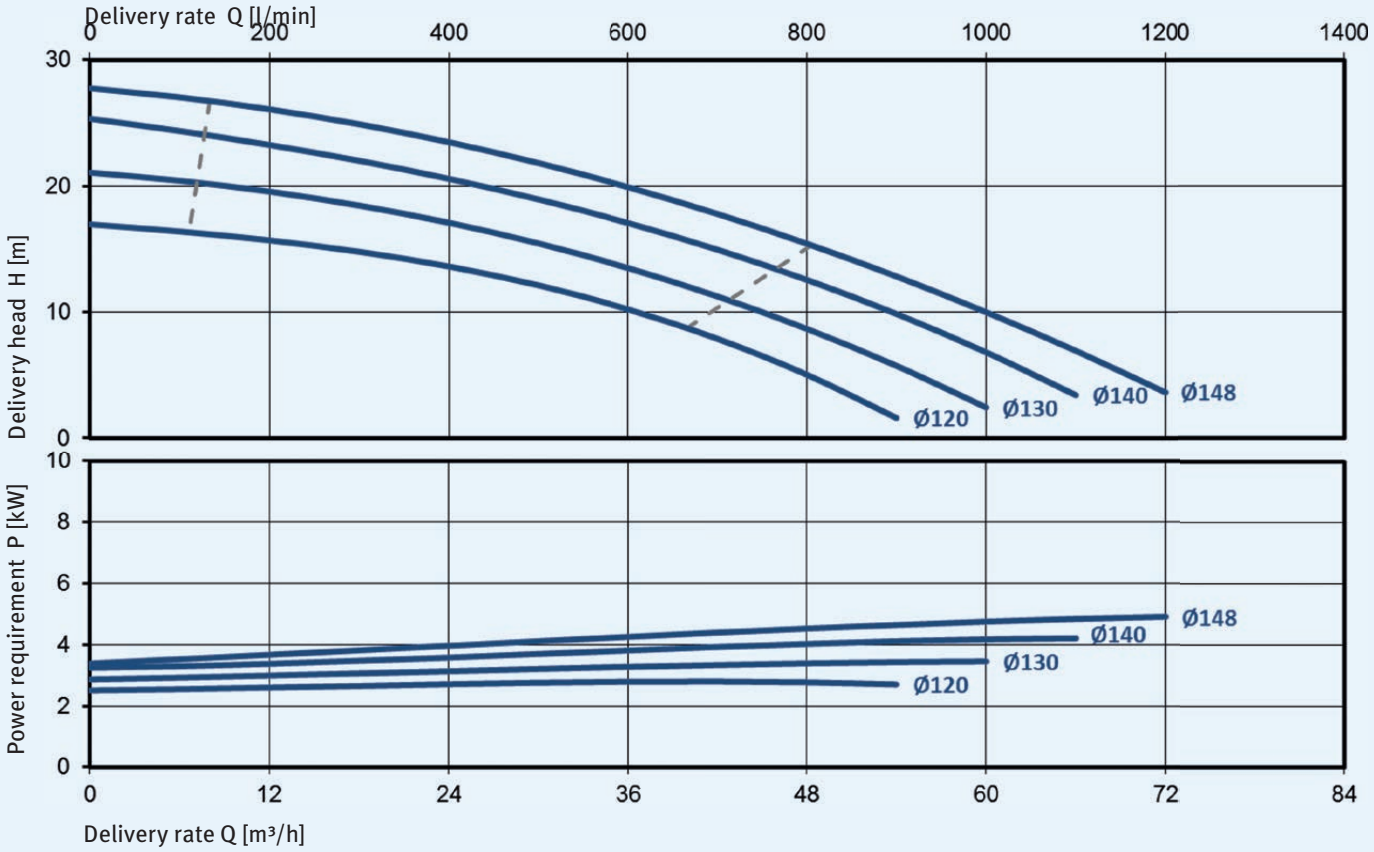

Characteristic curves for 3,500 min^{-1}, 60 Hz, 1 mm^2/s

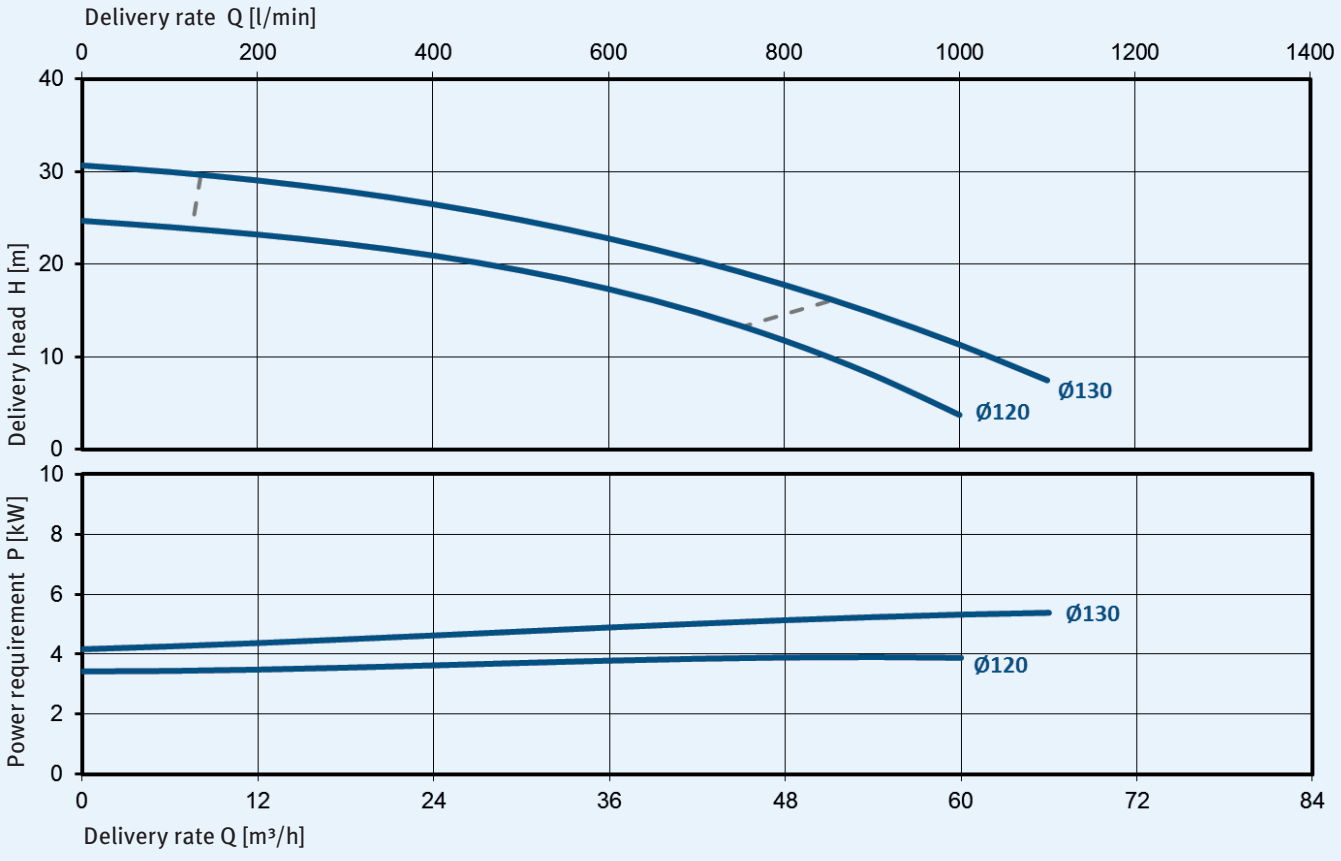

Dirt coolant pump TSK 65

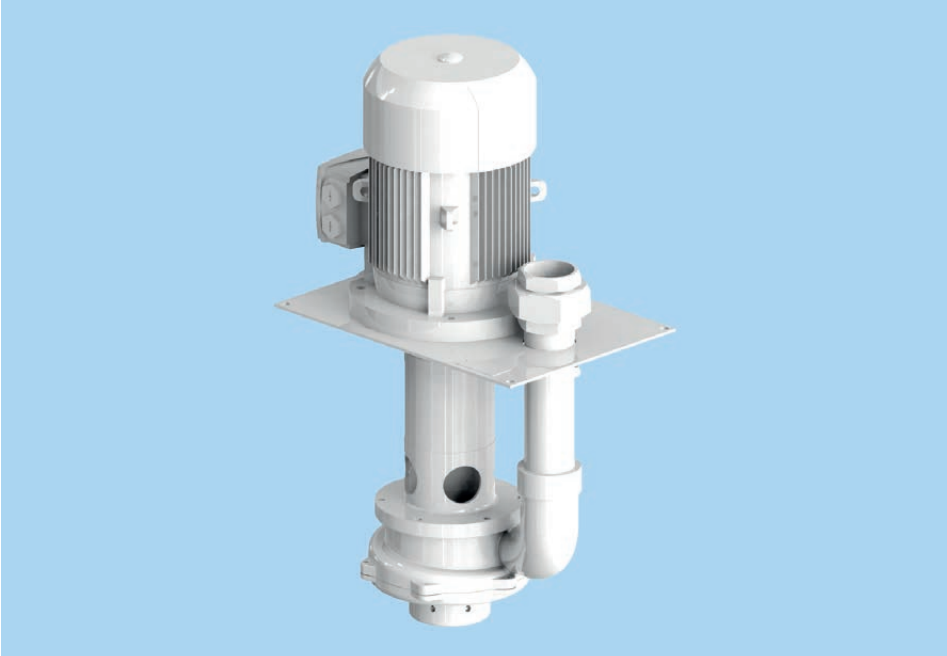

Variants

Type	T [mm]	H [mm]	Weight [kg]	Frequency [Hz]	Motor power (Nema Premium) [kW]	Noise level [dB(A)]
TSK 65-../55 482	482	410	110	50	5.5	68
TSK 65-../75 482	482	450	120	50	7.5	68
TSK 65-../55 842	842	410	140	50	5.5	68
TSK 65-../75 842	842	450	150	50	7.5	68
TSK 65-../55 482	482	410	110	60	6.3 (5.5)	72
TSK 65-../75 482	482	450	120	60	8.6 (7.5)	72
TSK 65-../55 842	842	410	140	60	6.3 (5.5)	72
TSK 65-../75 842	842	450	150	60	8.6 (7.5)	72

Dimensions

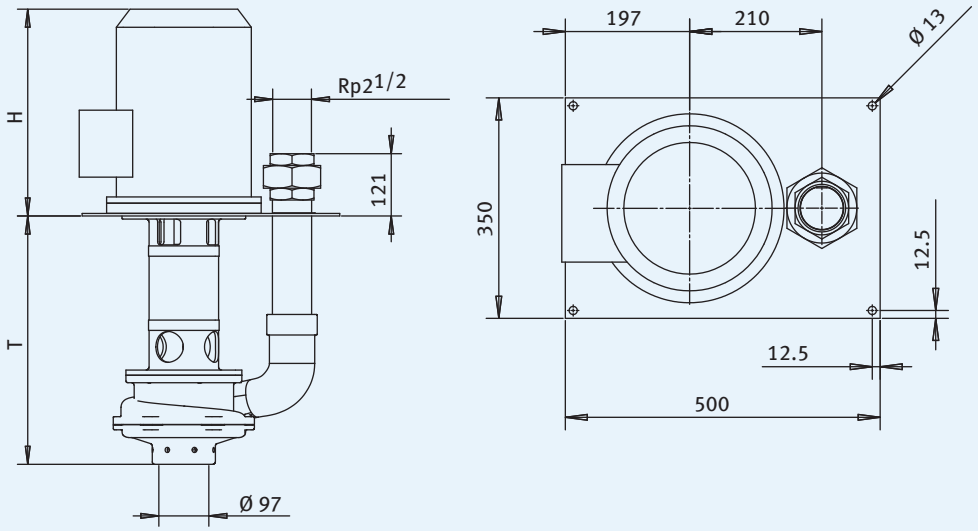

Characteristic curves for 2,900 min^{-1}, 50 Hz, 1 mm^2/s

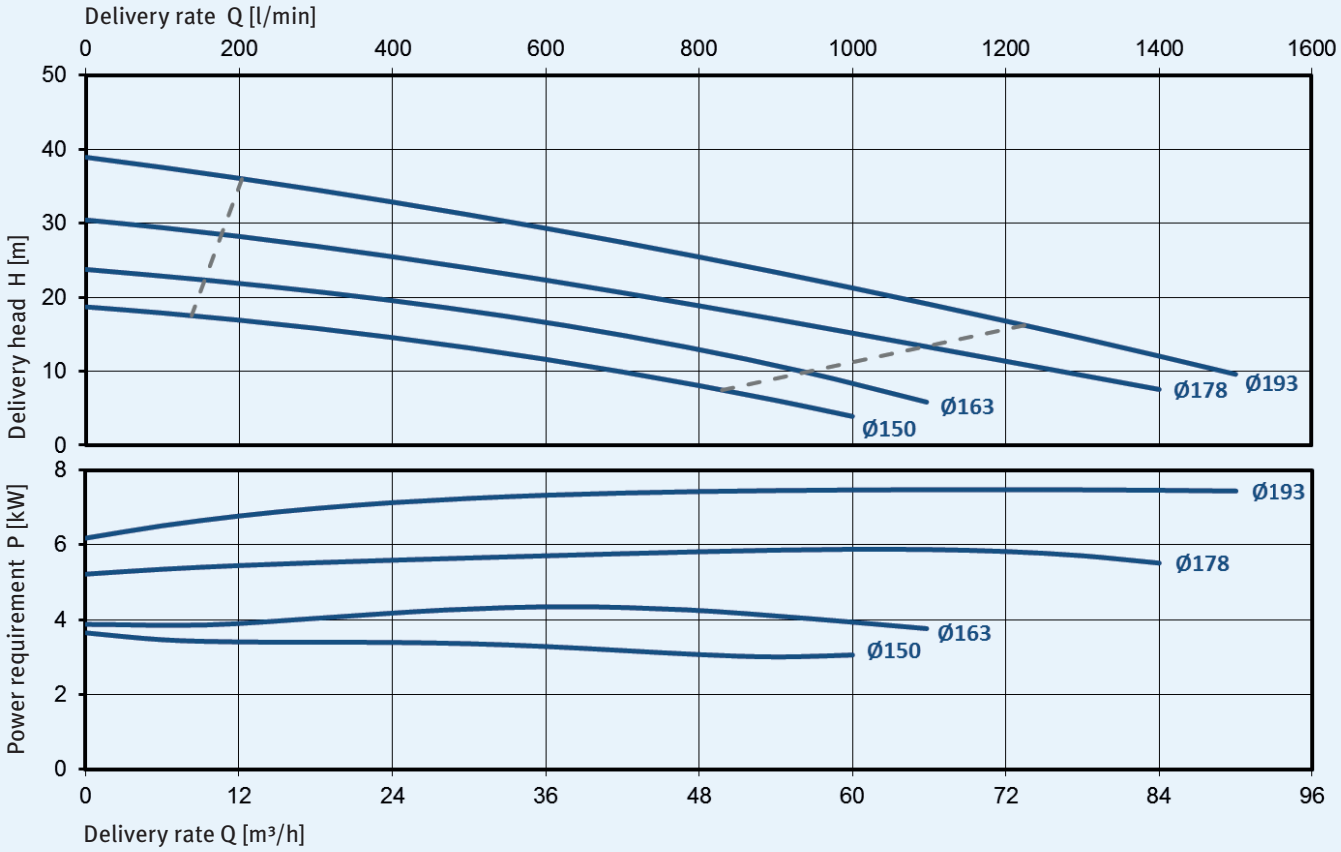

Characteristic curves for 3,500 min^{-1}, 60 Hz, 1 mm^2/s

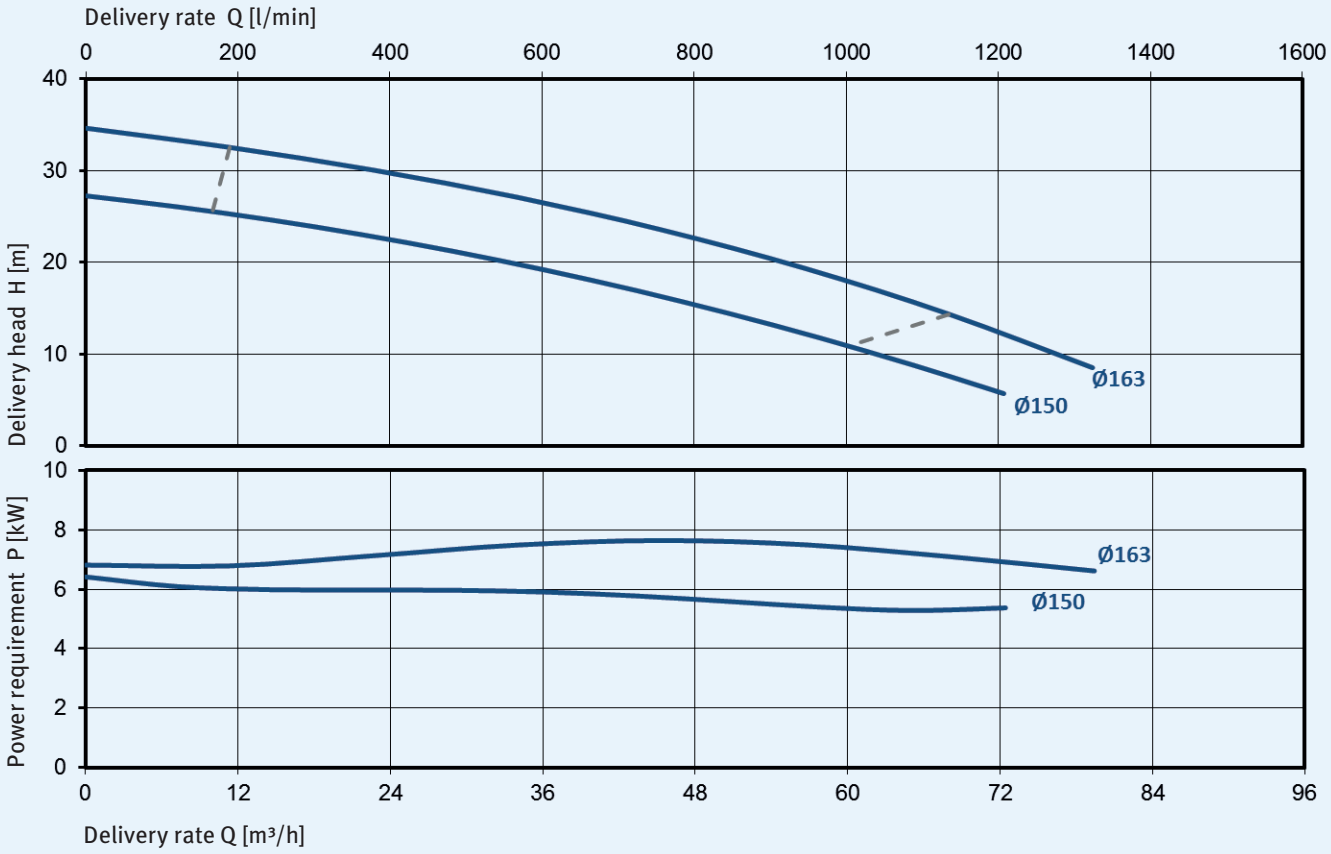

Shredder pumps

KNOLL shredder pumps TSC are cooling lubricant pumps with an integrated shredder for aluminum chips. These pumps are able to shred long aluminum chips into pump-appropriate size and to convey them to the central preparation station with the help of cooling lubricant. Therefore, an additional chip reducer is not necessary.

Properties

- Flexible design with standard motor
- Energy efficient in conjunction with frequency converter
- Bearing is protected by shaft seal ring
- Rigid shaft through bearing of the cutting head in a ceramic precision bearing
- Durable and low-maintenance due to hardened hydraulic and reducer components
- Semi-open radial impeller
- Impeller material ST

Dimensions

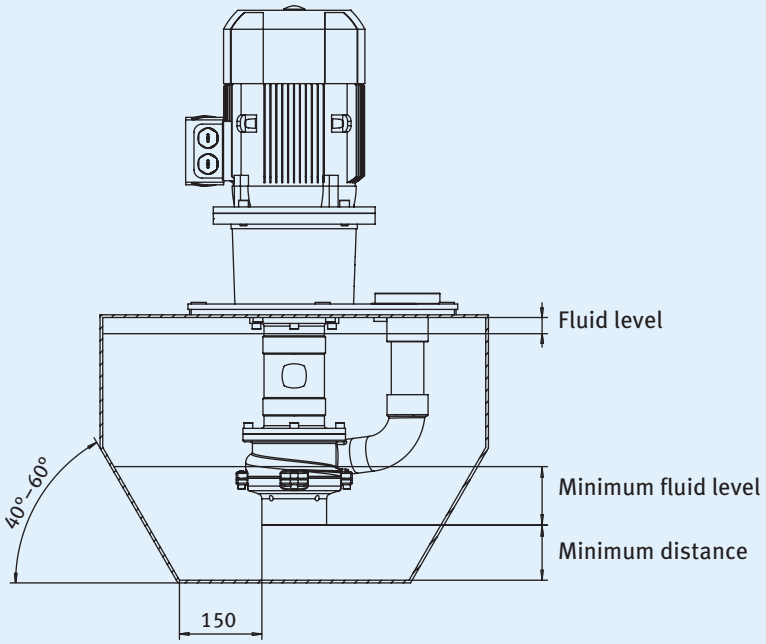

Container design

Minimum volume:	250 l
Minimum wall thickness:	5 mm

Maximum performance data

Type	Air portion Vol.-%	Delivery rate [l/min]	Delivery head [m]	Chip thickness [mm]	Chip freight [g/l]
TSC 50	25	1000	26	0.5	7
TSC 65	25	1000	20	0.5	10

Fluid level

Type	Minimum distance [mm]	Minimum fluid level [mm]	Fluid level [mm]
TSC 50	100	90	40
TSC 65	100	100	30 (170*)

* Dimension valid for TSC 65-.../...500

Characteristic curve

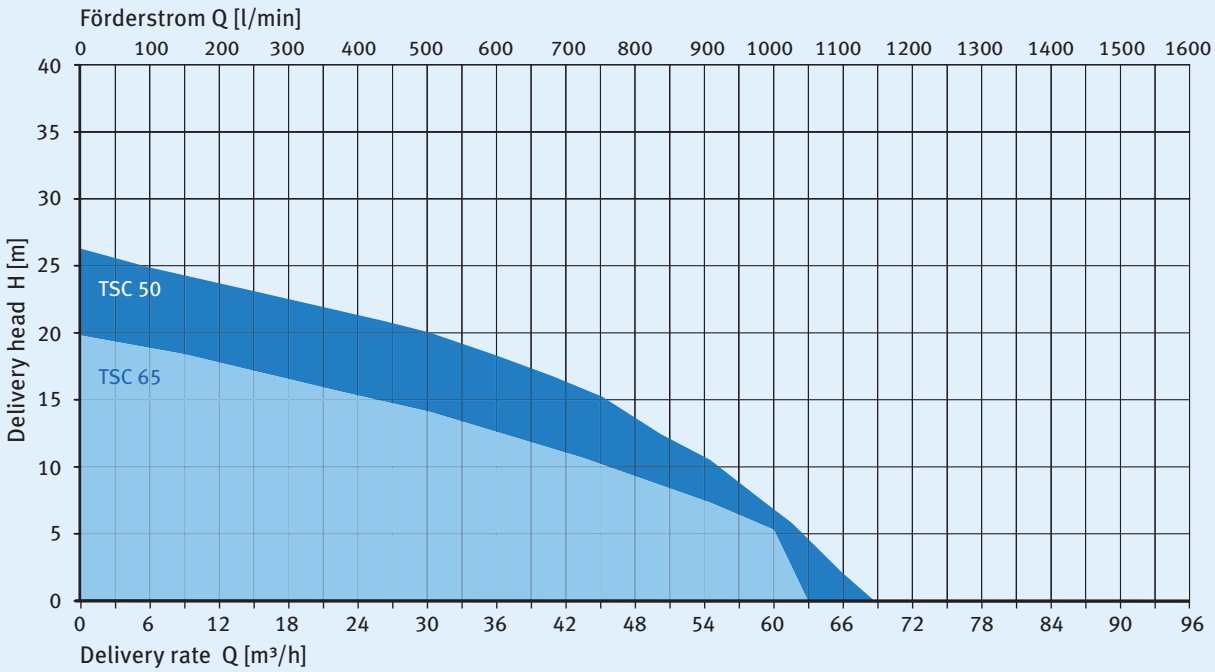

Shredder pump TSC 50

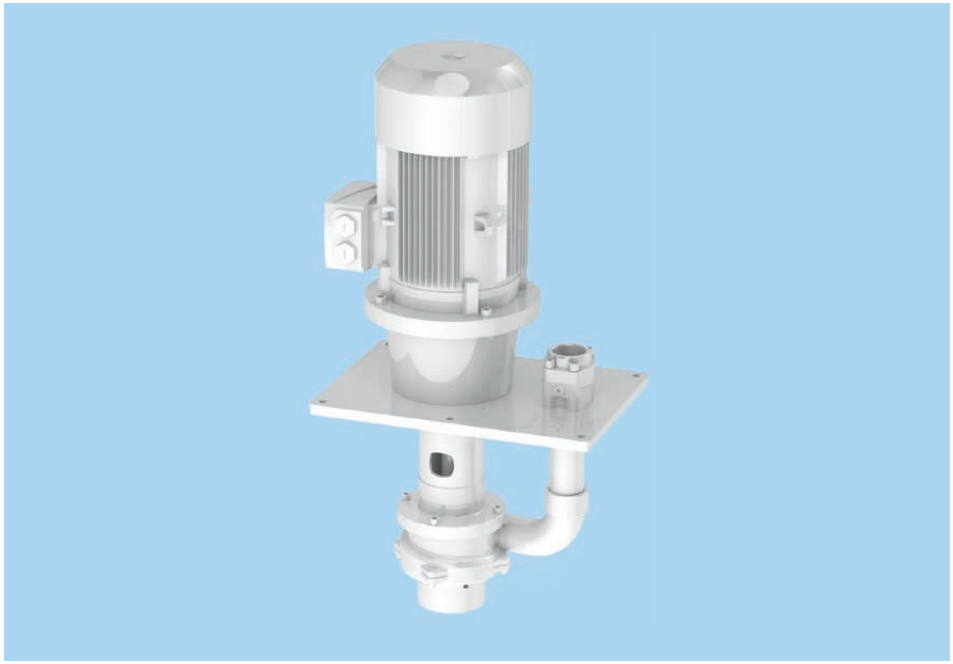

Variants

Type	T* [mm]	H [mm]	Weight [kg]	Frequency [Hz]	Motor power (Nemia Premium) [kW]	Noise level [dB(A)]
TSC 50-.. / 40 385	385	509	82	50	4.0	
TSC 50-.. / 40 495	495	509	87	50	4.0	
TSC 50-.. / 55 385	385	560	93	50 / 60	5.5	
TSC 50-.. / 55 495	495	560	99	50 / 60	5.5	
TSC 50-.. / 75 385	385	610	106	50 / 60	7.5	
TSC 50-.. / 75 495	495	610	111	50 / 60	7.5	

* The following immersion depths are possible on request: 610 mm, 720 mm and 830 mm

Dimensions

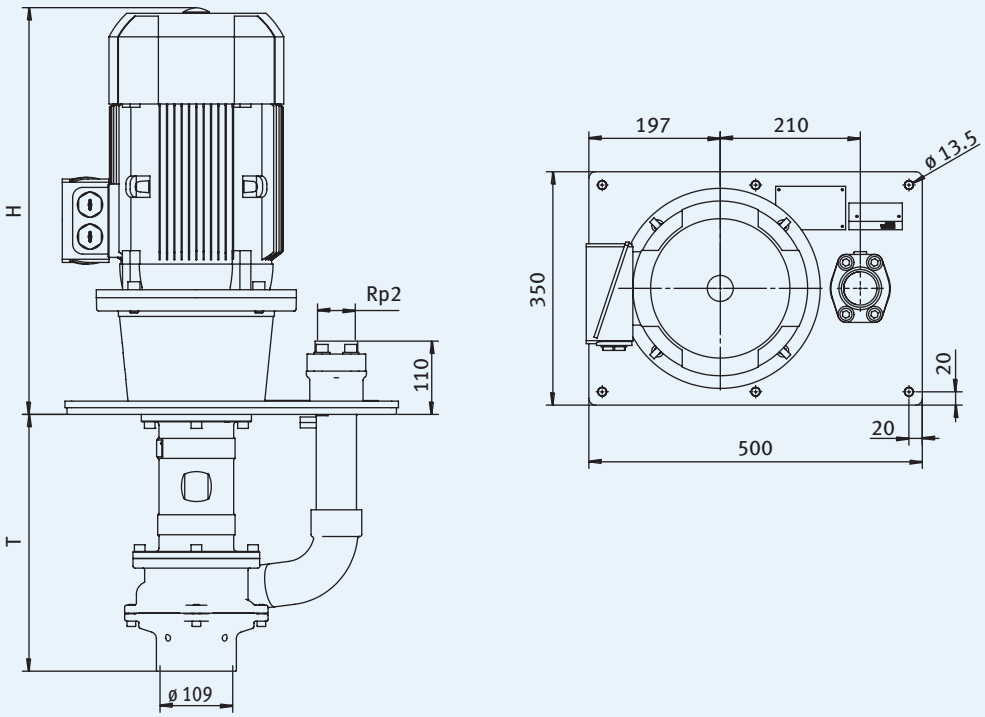

Characteristic curves for 2,900 min^{-1}, 50 Hz, 1 mm^2/s

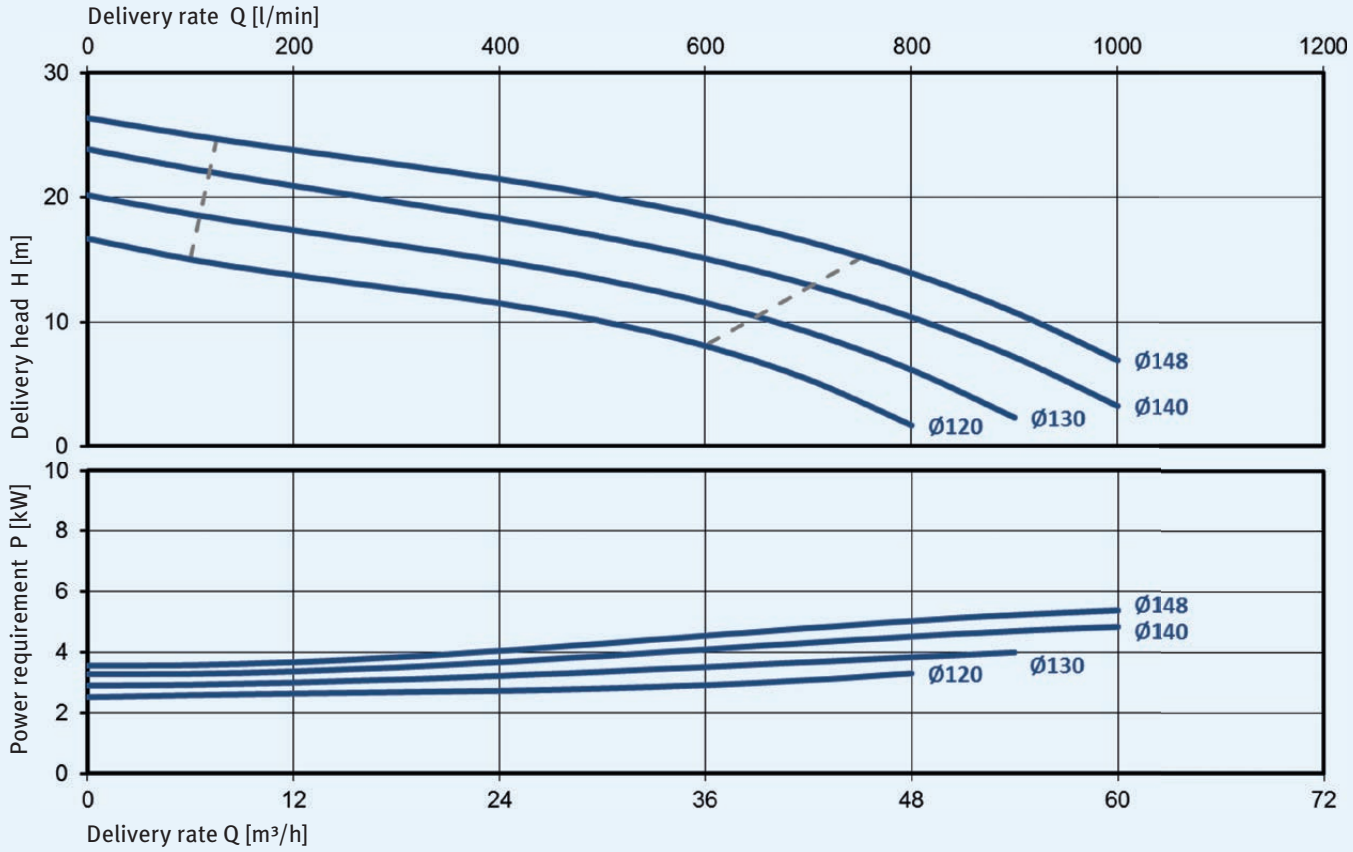

Characteristic curves for 3,500 min^{-1}, 60 Hz, 1 mm^2/s

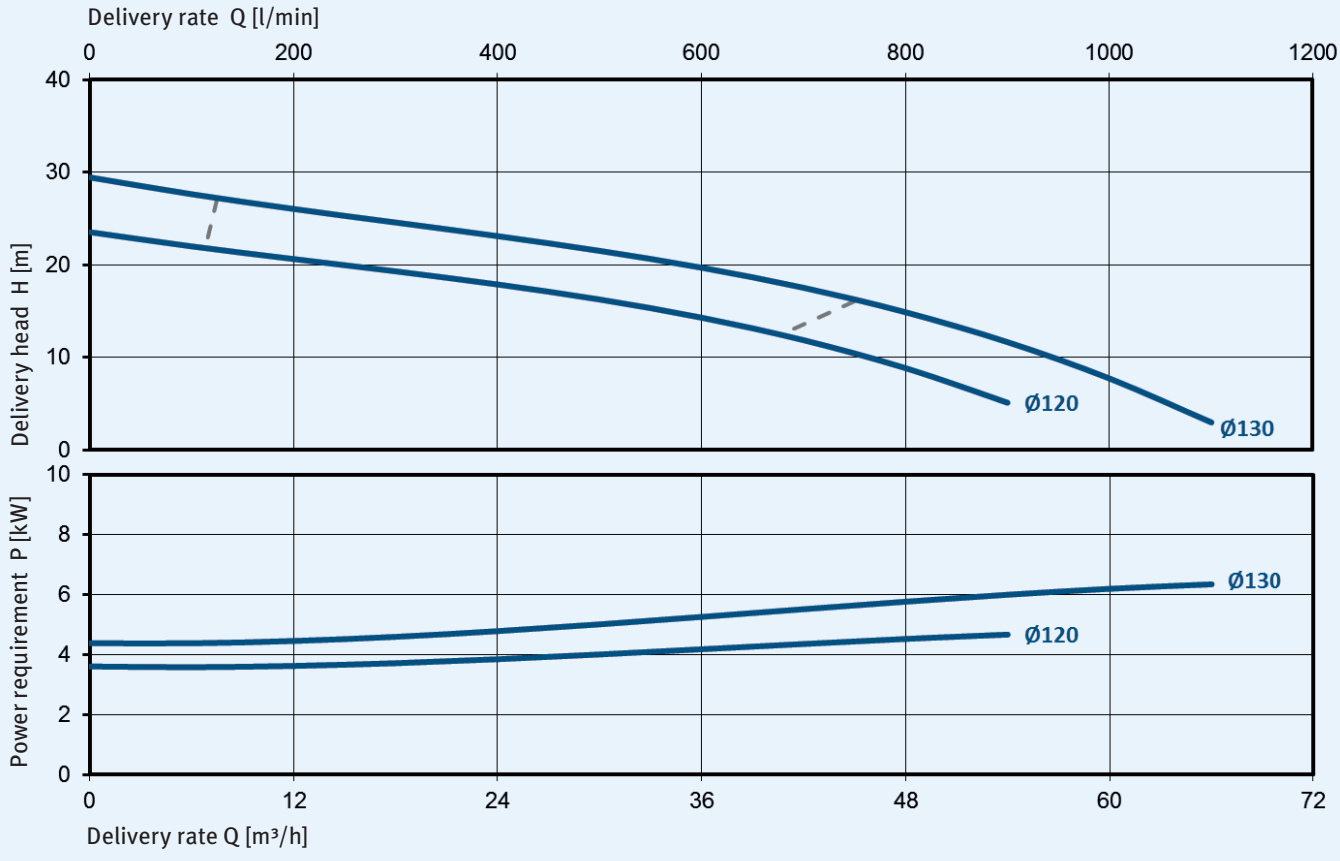

Shredder pump TSC 65

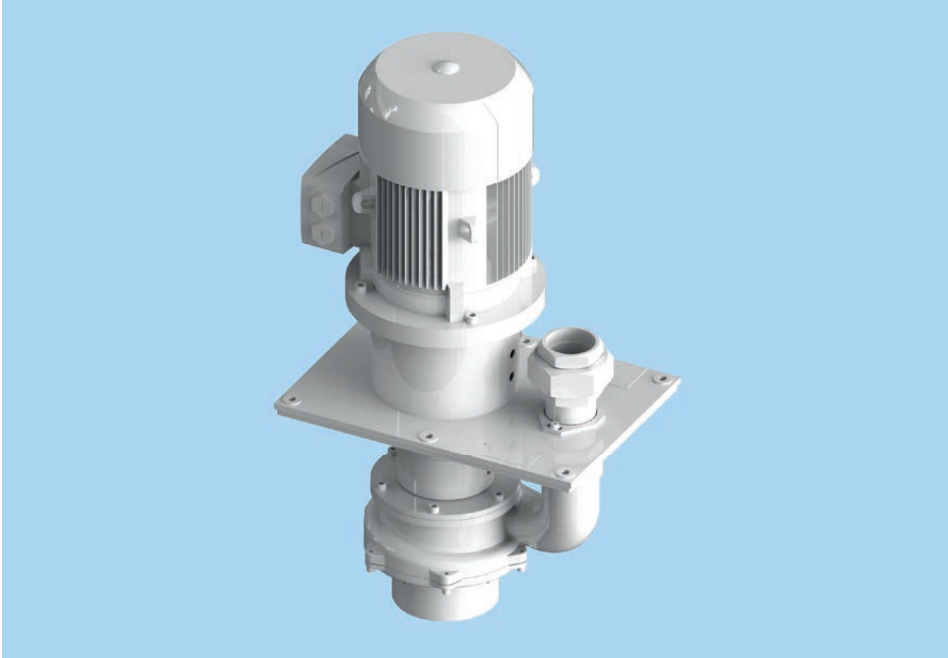

Variants

Type	T [mm]	H [mm]	Weight [kg]	Frequency [Hz]	Motor power (Nemia Premium) [kW]	Noise level [dB(A)]
TSC 65-50 / 55 360	363	573	110	50	5.5	
TSC 65-63 / 75 360	363	573	110	50	7.5	
TSC 65-50 / 55 500	501	425	110	50	5.5	
TSC 65-63 / 75 500	501	425	110	50	7.5	
TSC 65-50 / 55 360	363	573	110	60	6.3 (5.5)	
TSC 65-63 / 75 360	363	573	110	60	8.6 (7.5)	
TSC 65-50 / 55 500	501	425	110	60	6.3 (5.5)	
TSC 65-63 / 75 500	501	425	110	60	8.6 (7.5)	

Dimensions

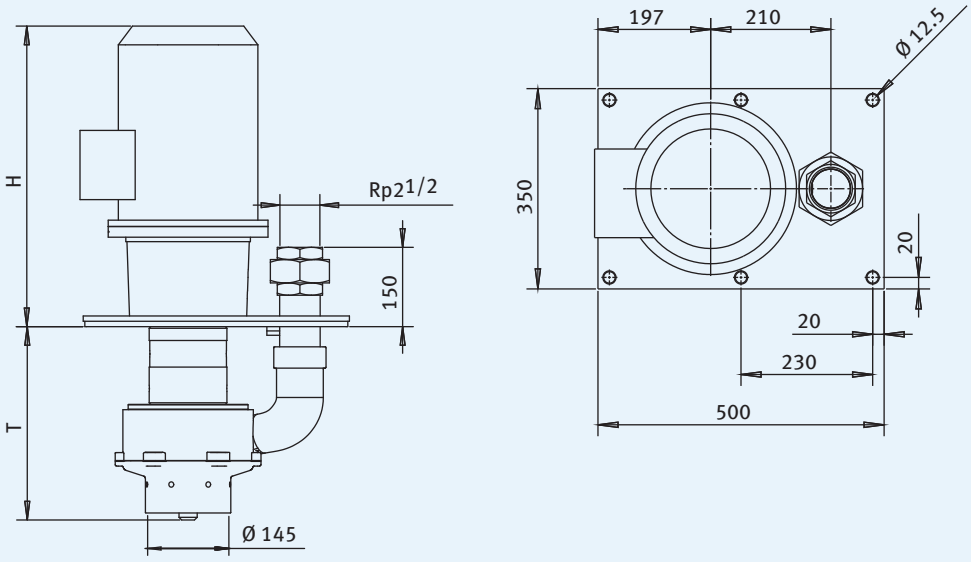

Characteristic curves for 2,900 min^{-1}, 50 Hz, 1 mm^2/s

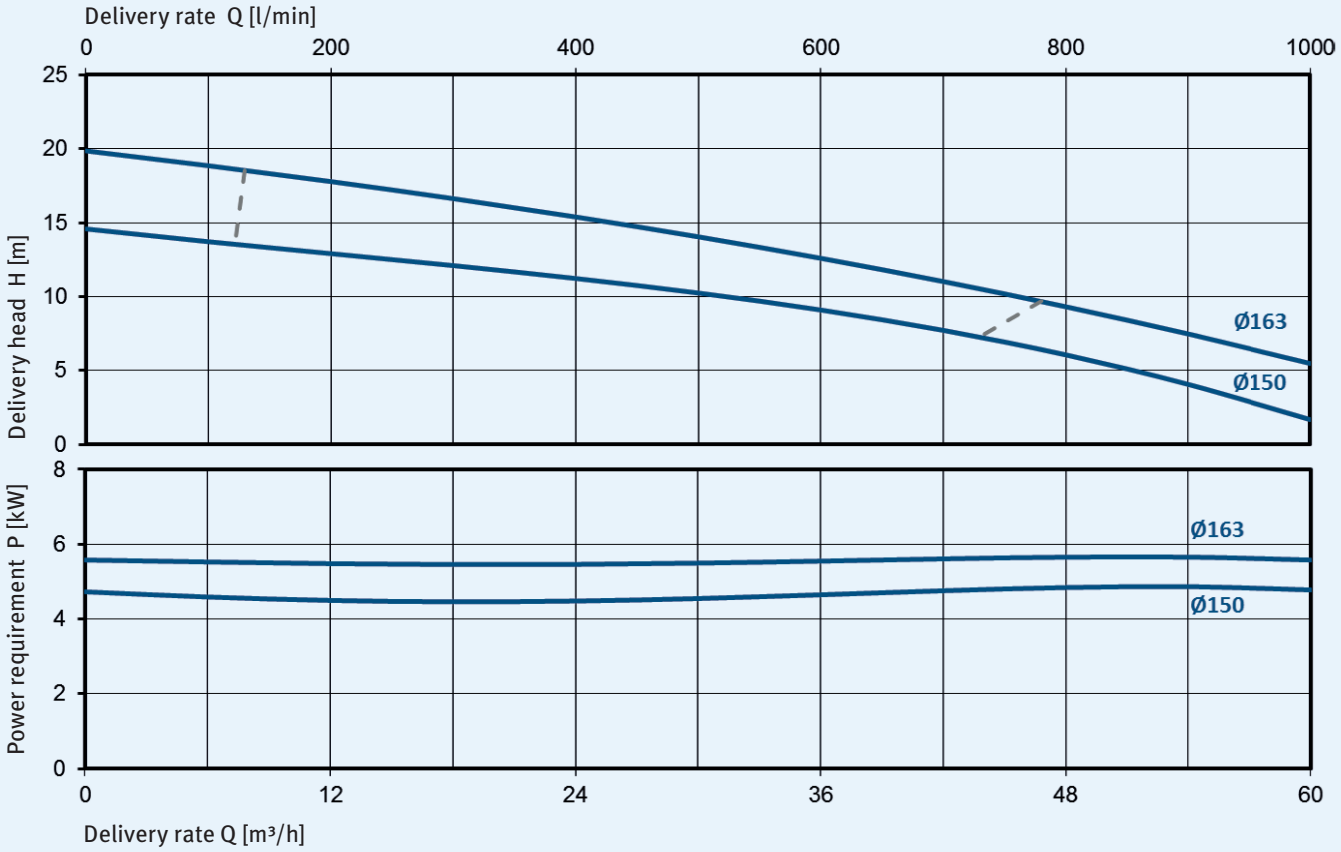

Characteristic curves for 3,500 min^{-1}, 60 Hz, 1 mm^2/s

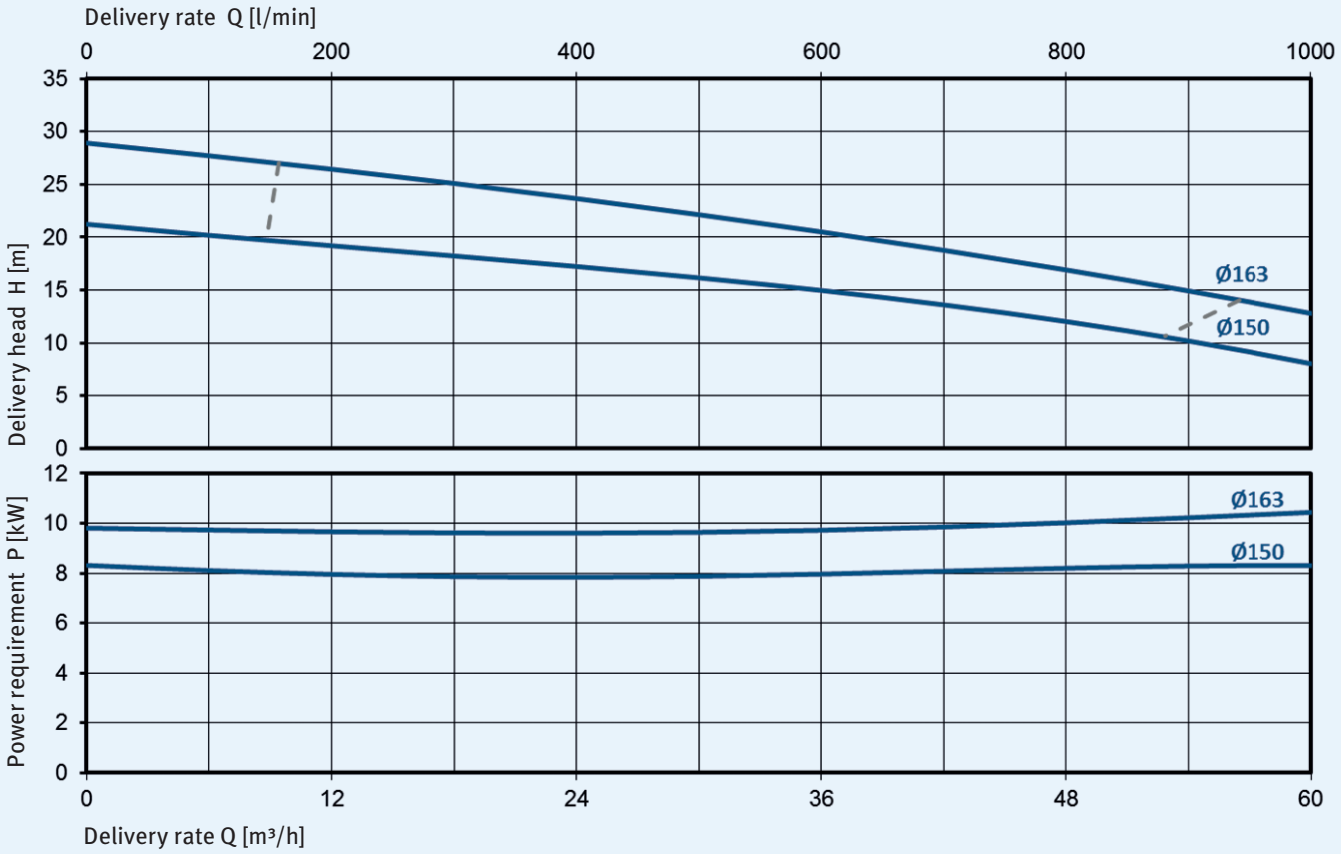

KNOLL Maschinenbau GmbH
Schwarzachstraße 20
D-88348 Bad Saulgau
Tel. +49 7581 2008-0
Fax +49 7581 2008-90140
info.itworks@knoll-mb.de
www.knoll-mb.de

Technische Änderungen vorbehalten

508954